Brilliant
THE JEWEL IN LIGHTING

Woodhill
93721...

04.18

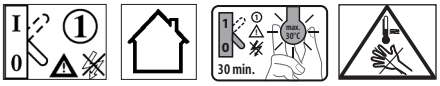

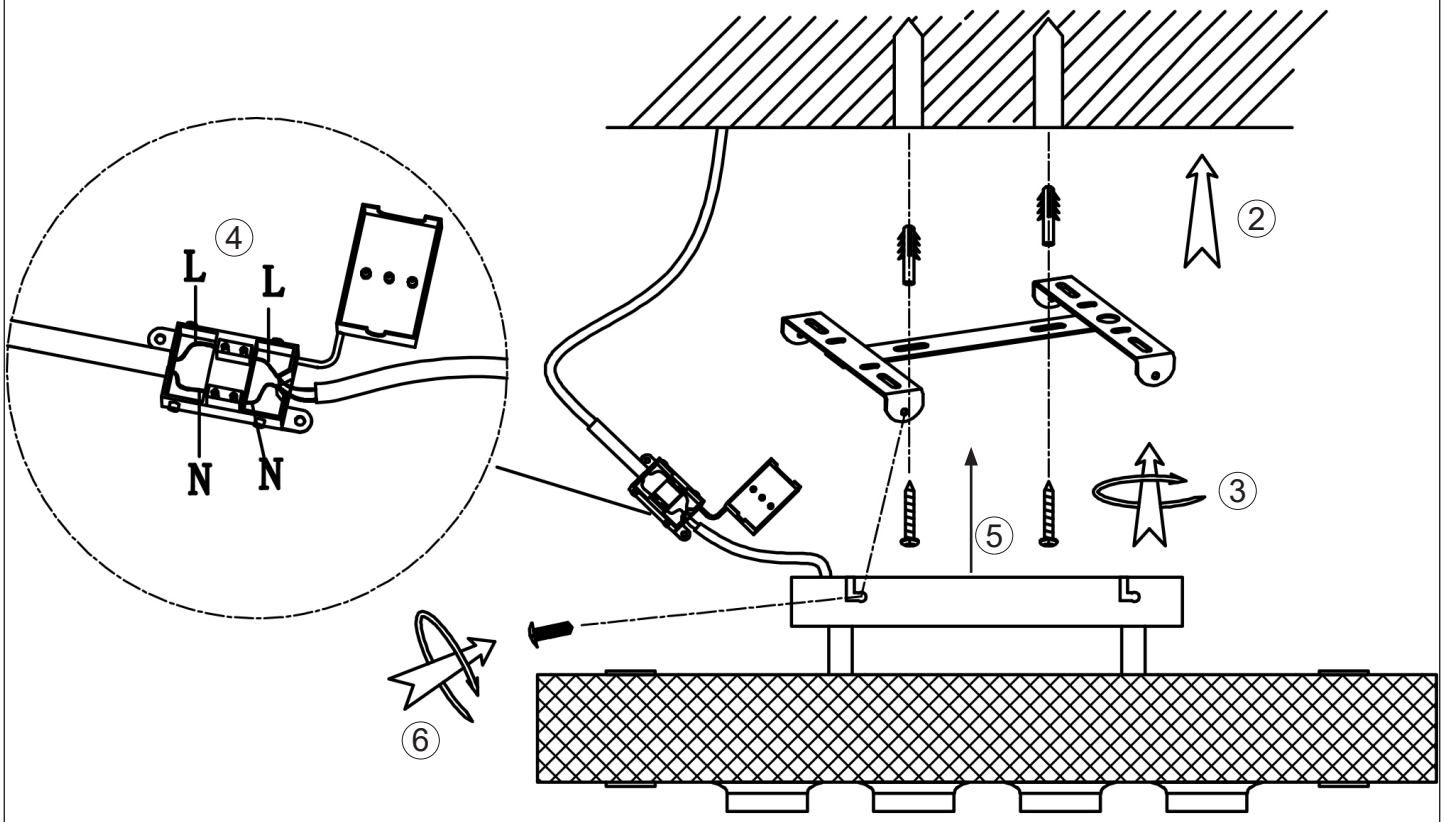

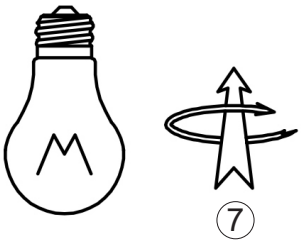

7
No incl.