Brilliant
THE JEWEL IN LIGHTING

Newport
44280...

12.17

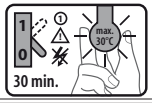

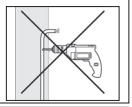

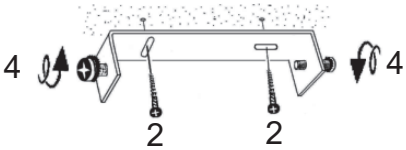

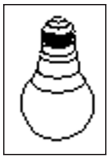
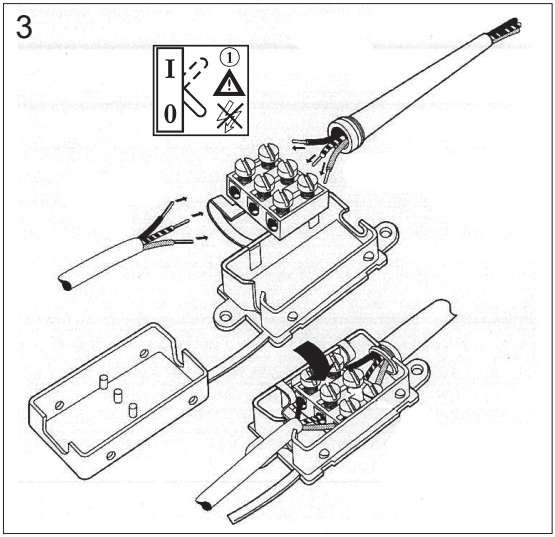
No incl.