Brilliant

JANEL

90982...

①

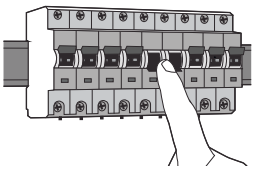

②

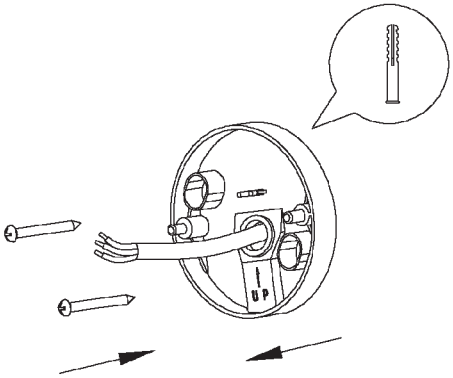

③

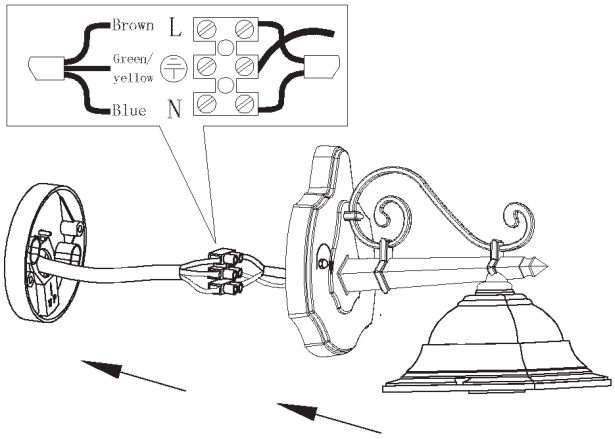

④

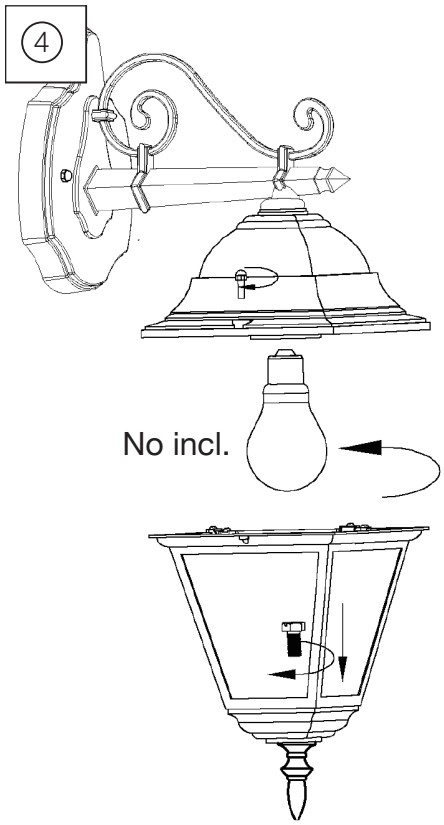
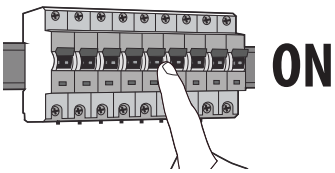
⑤