Brilliant

JANEL

90981...

①

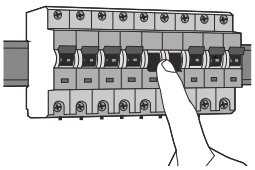

OFF

②

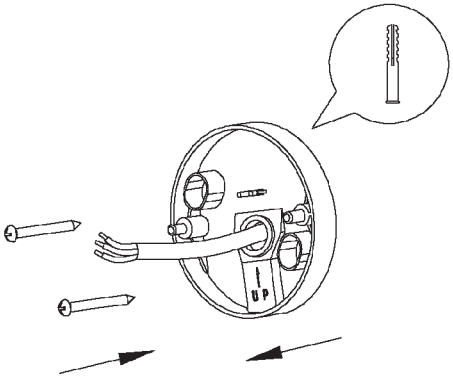

③

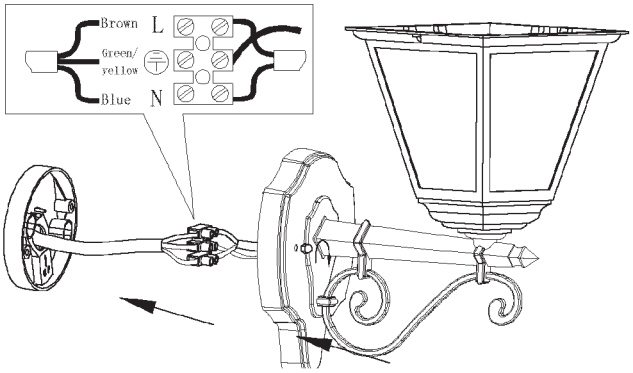

④

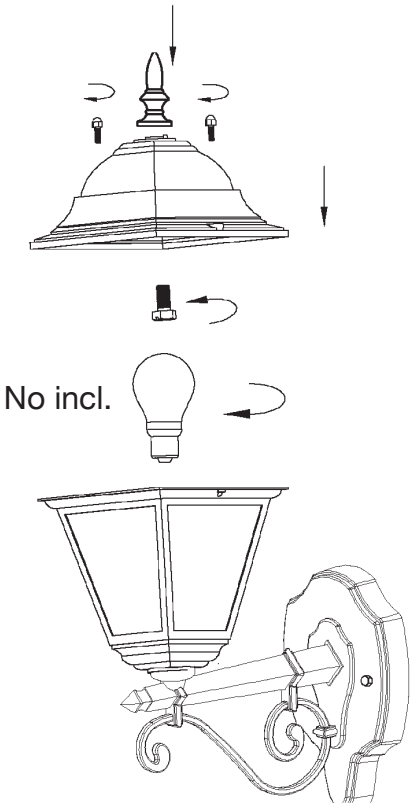

⑤

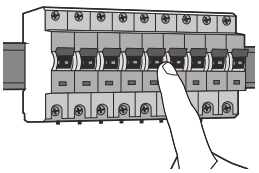

ON