Brilliant

JANDY

90965...

1

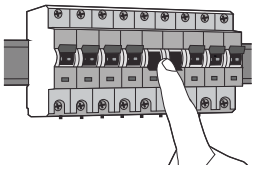

OFF

2

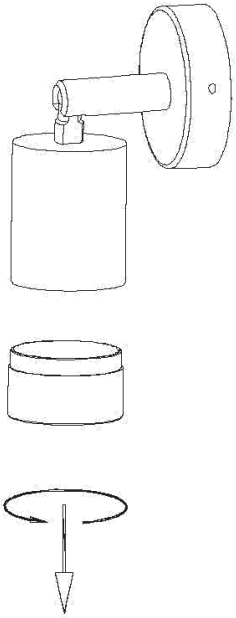

3

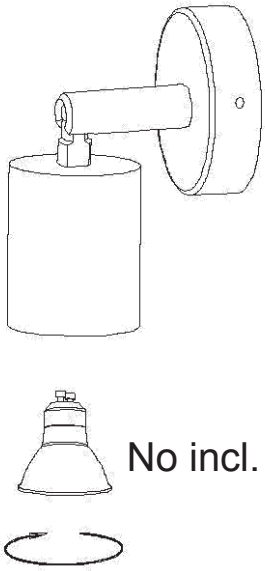

4

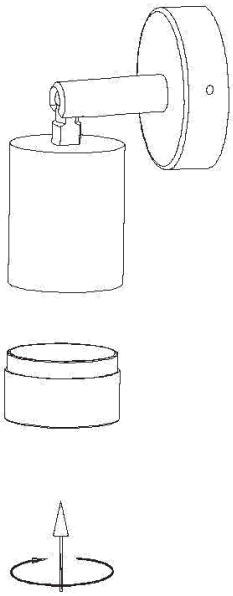

5

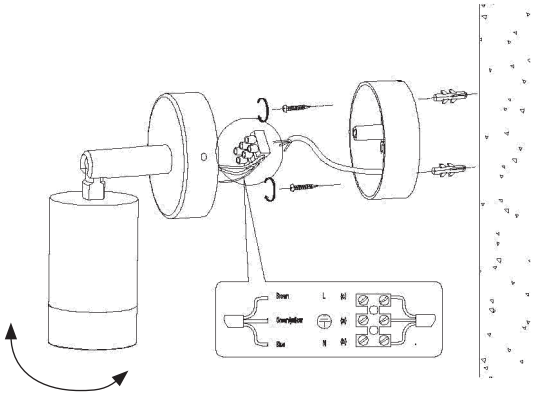

6

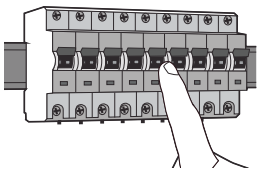

ON