Brilliant
THE JEWEL IN LIGHTING

Freya
93220...
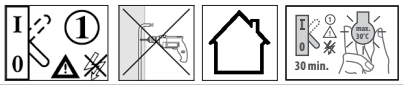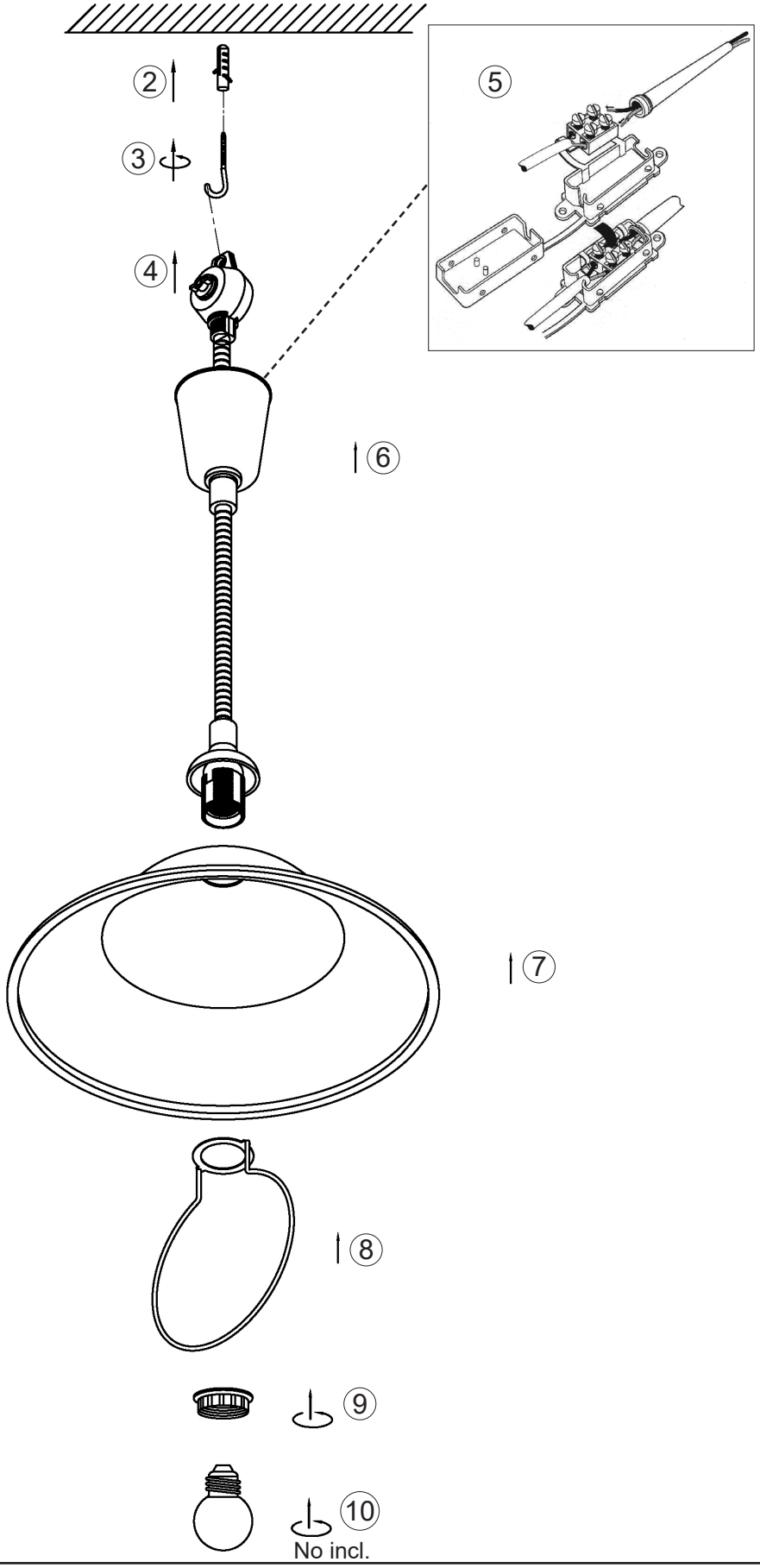
09.19