Brilliant
THE JEWEL IN LIGHTING

Bole
G46798...

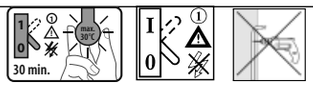
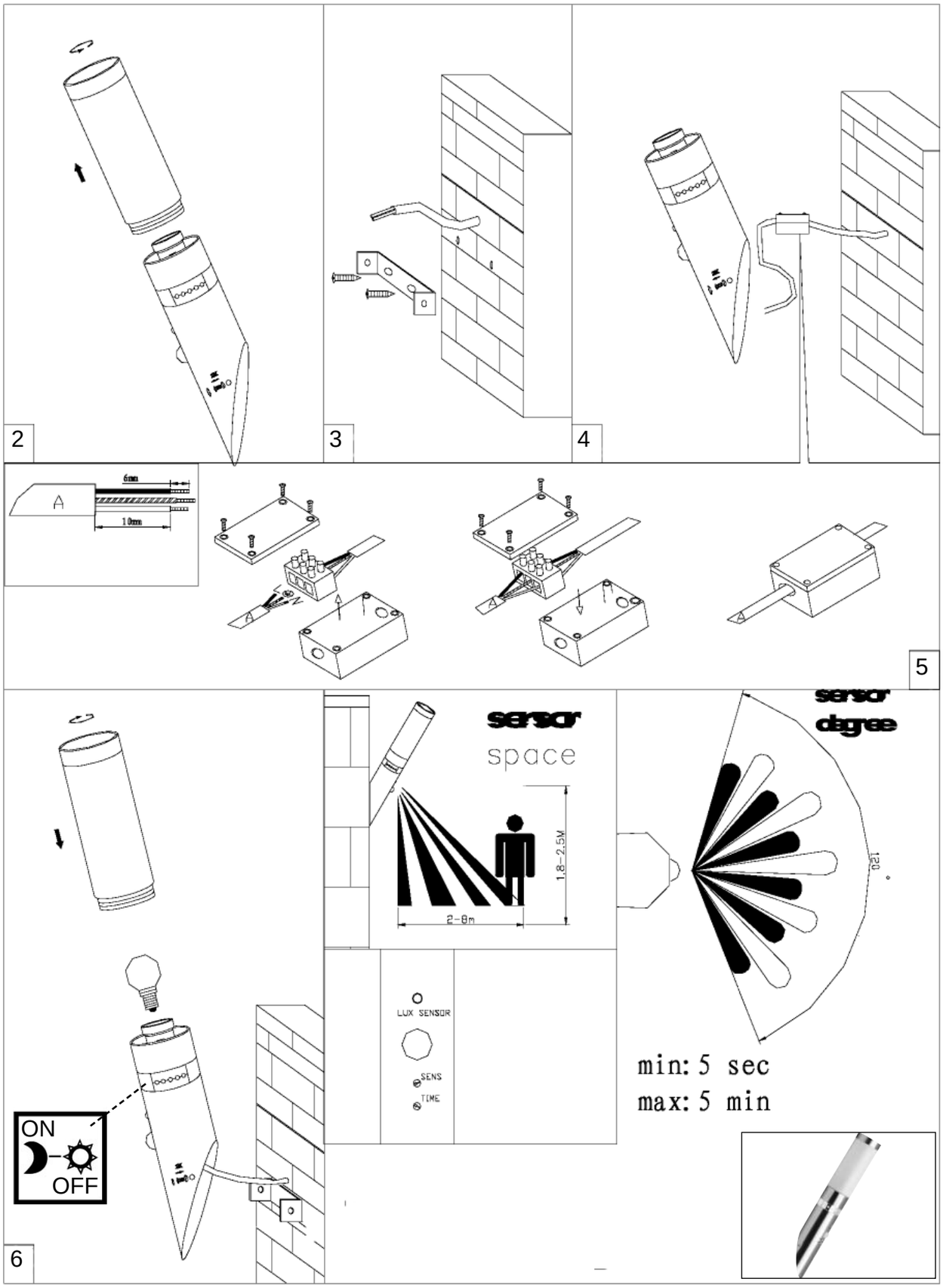
05.11