Brilliant
THE JEWEL IN LIGHTING

Kaminika

01.18
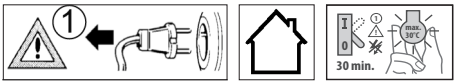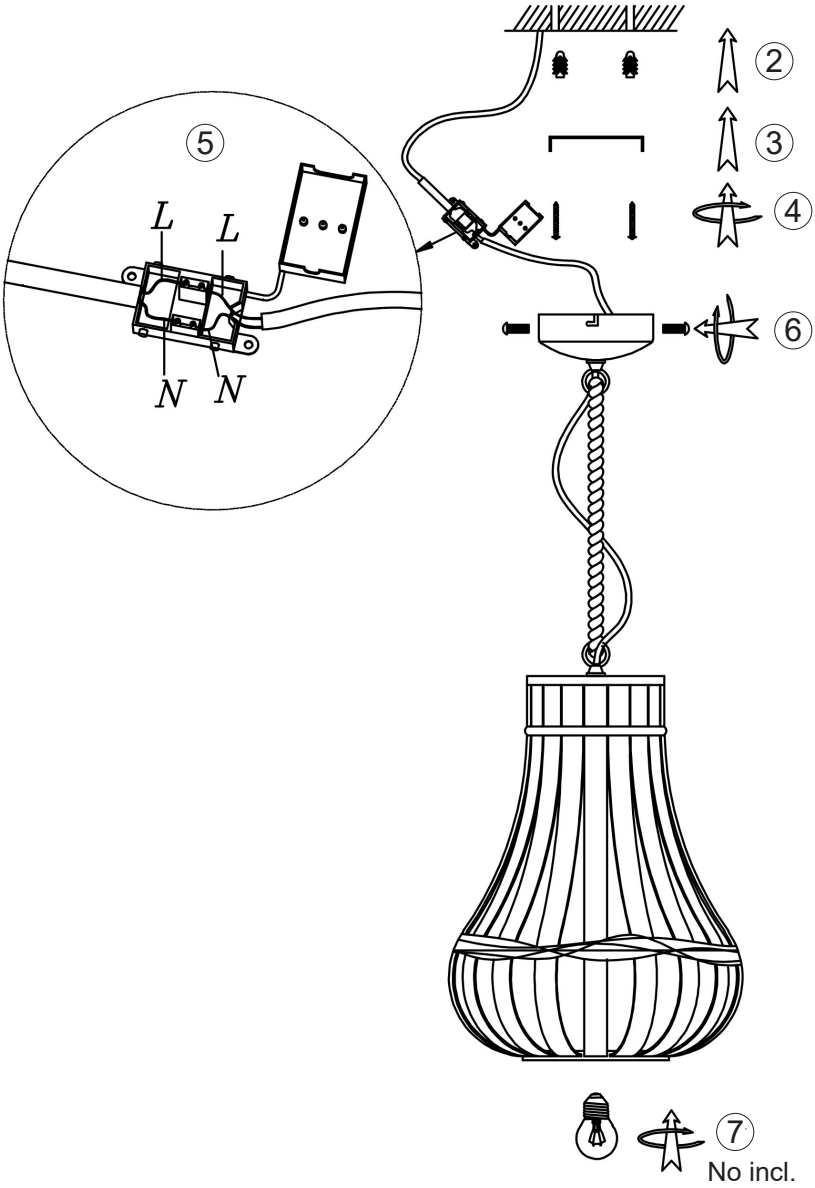
93578... - ø 460mm
93579... - ø 630mm