Brilliant
THE JEWEL IN LIGHTING

Bulb
21210...
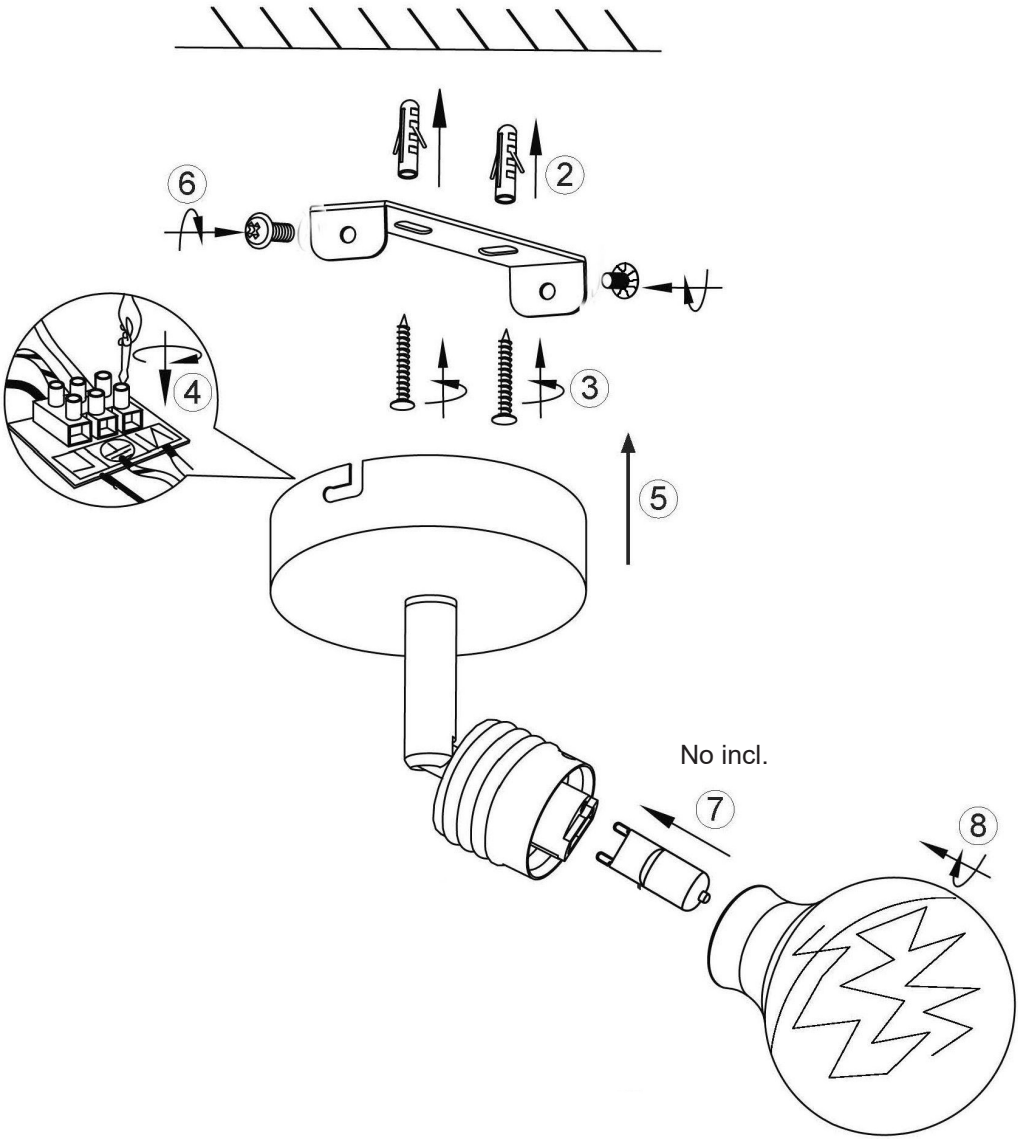
01.18