Brilliant
THE JEWEL IN LIGHTING

Bobbi
94458...
94459...
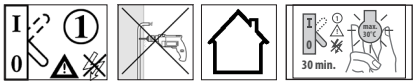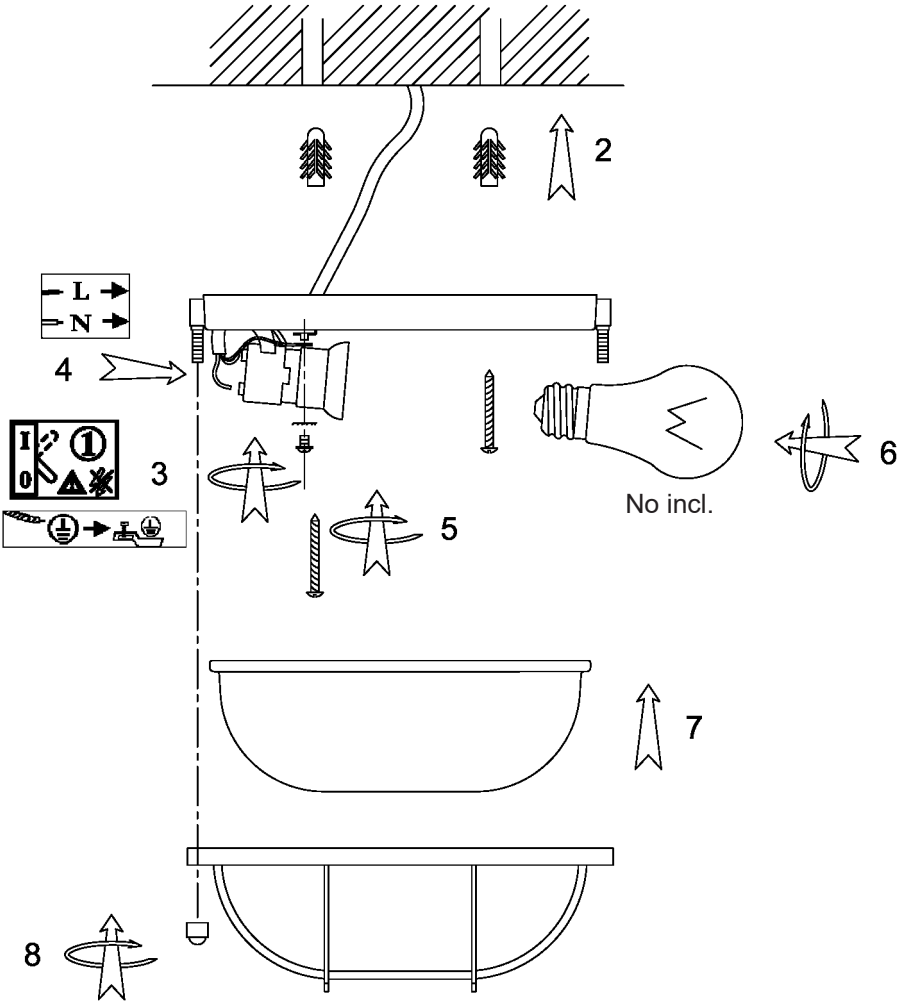
01.18