Brilliant
THE JEWEL IN LIGHTING

Interface
96260...

10.15

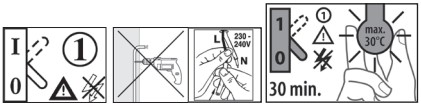

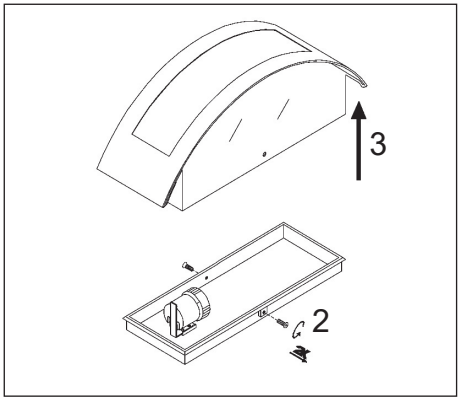

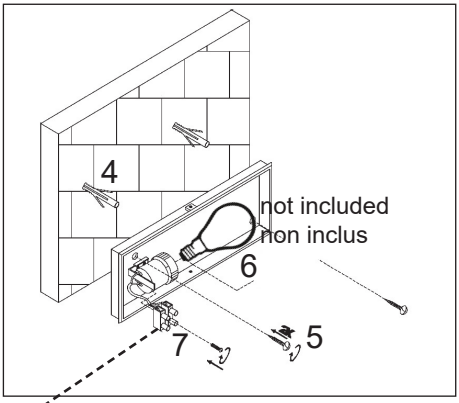

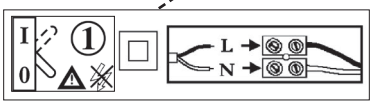

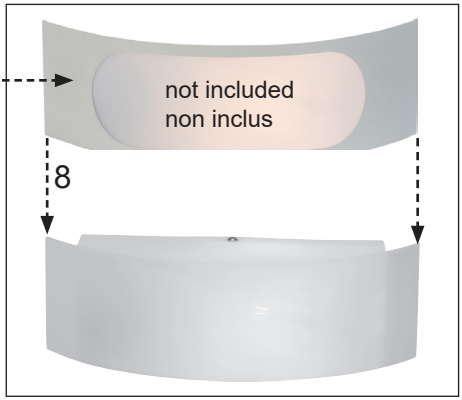

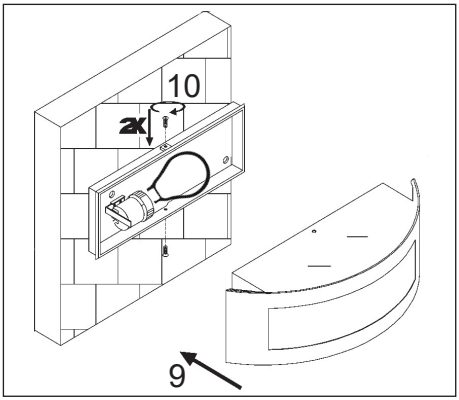

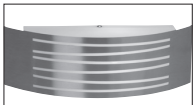
98190...

98191...

98192...

98193...

98194...