Brilliant
THE JEWEL IN LIGHTING

Mauritius

03.19

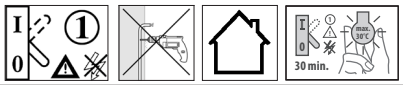

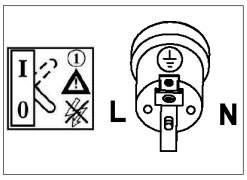

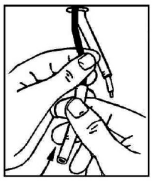

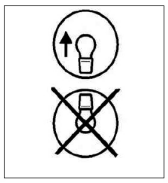

90103...

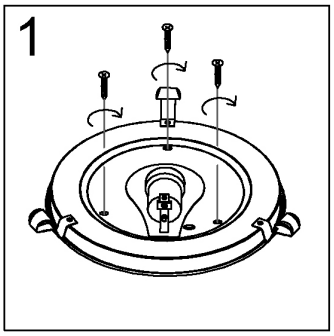

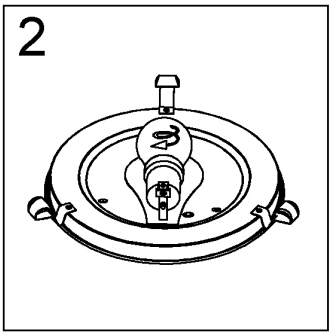

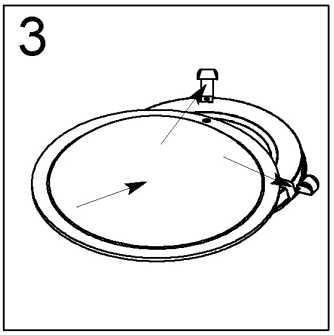

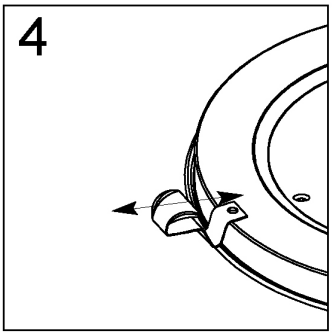

90104...

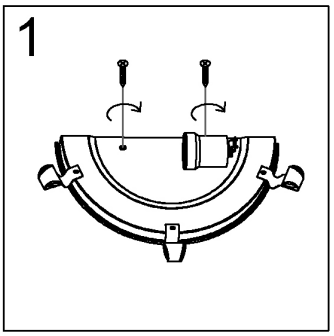

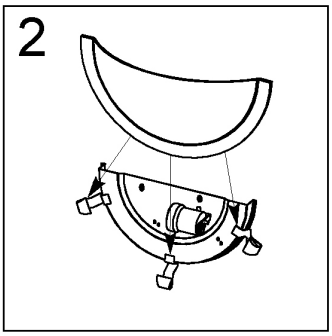
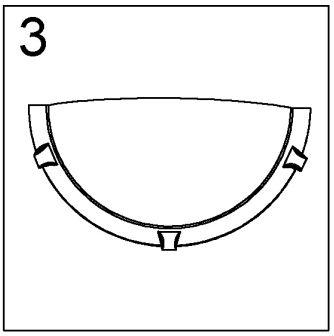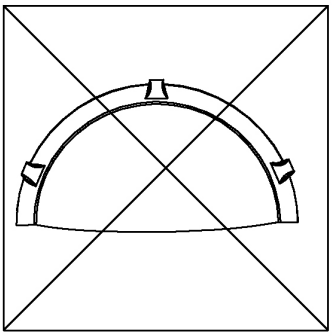
90105...