Brilliant
THE JEWEL IN LIGHTING

Trial
93377...
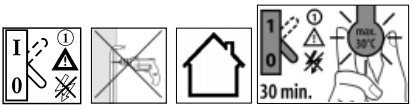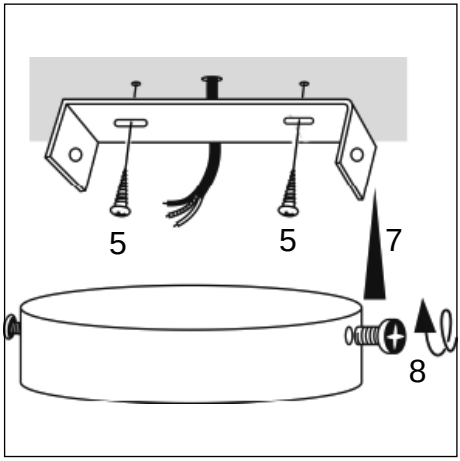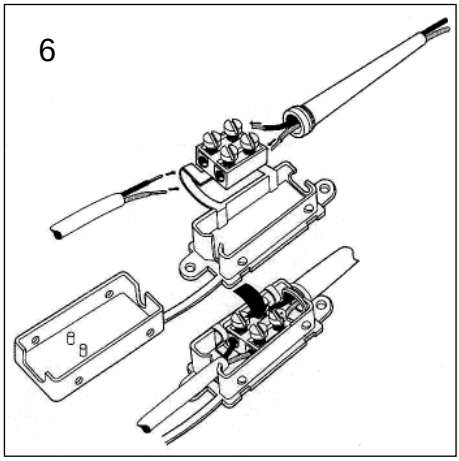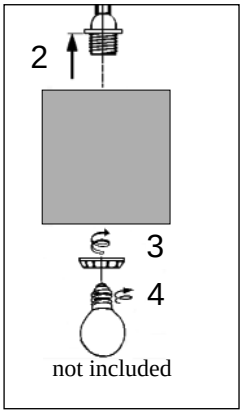
01.13