Brilliant
THE JEWEL IN LIGHTING

Babsan
51413...
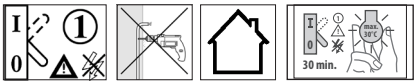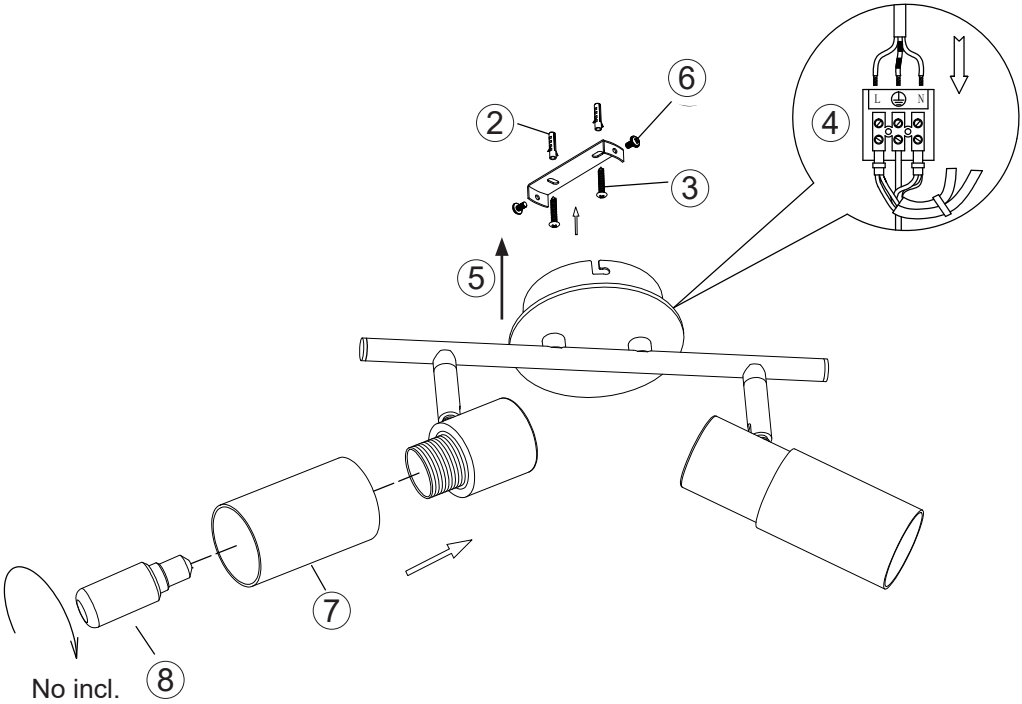
01.18