Brilliant
THE JEWEL IN LIGHTING

Babsan
51432...
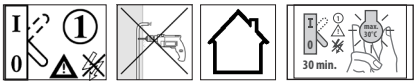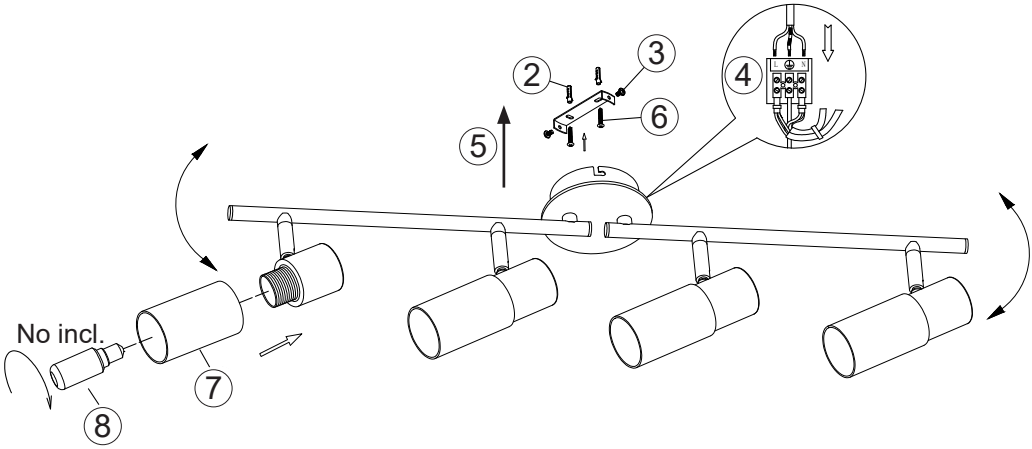
01.18