Brilliant
THE JEWEL IN LIGHTING

Manama
78101...
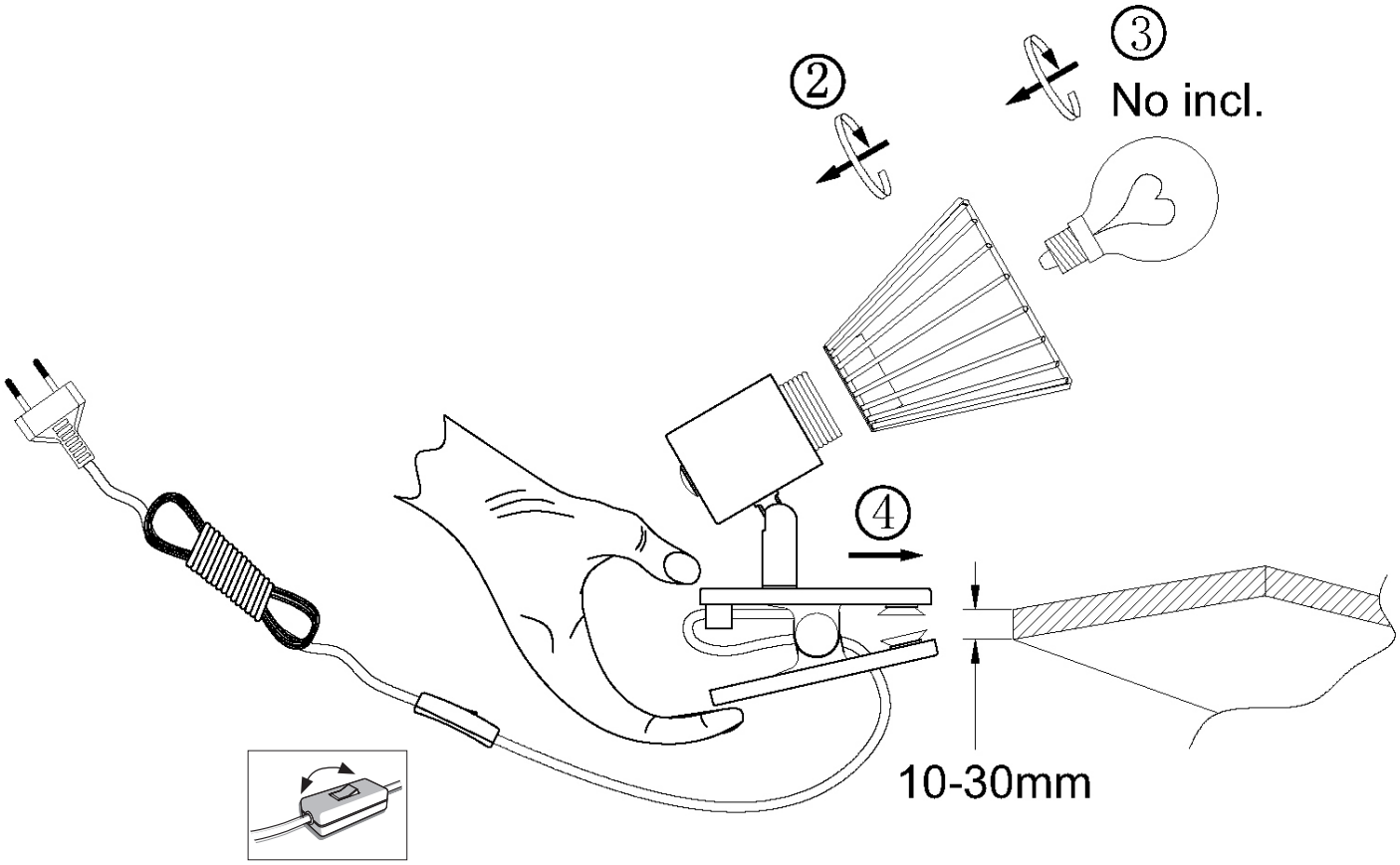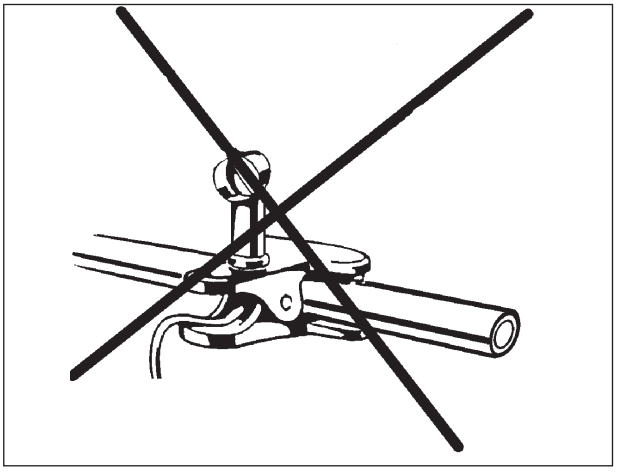
06.19