Brilliant
THE JEWEL IN LIGHTING

Amoa
99117...
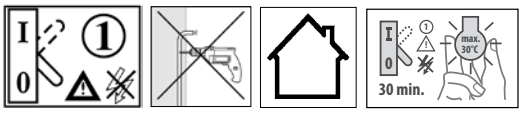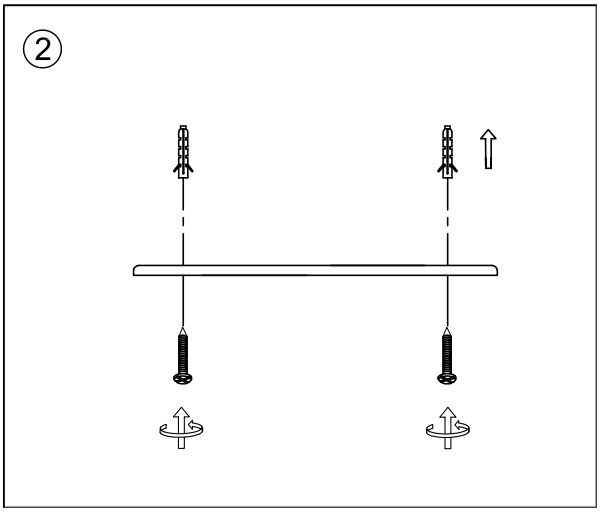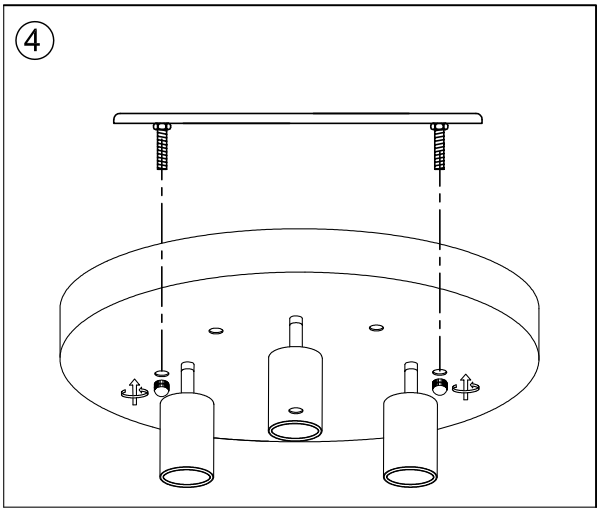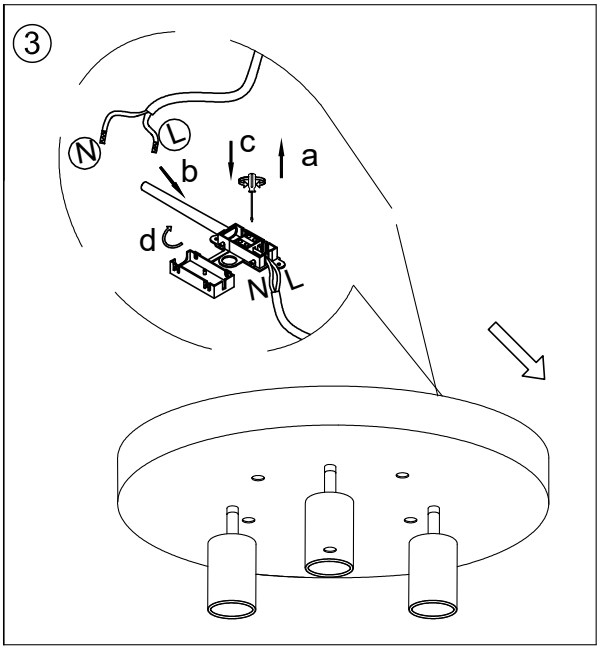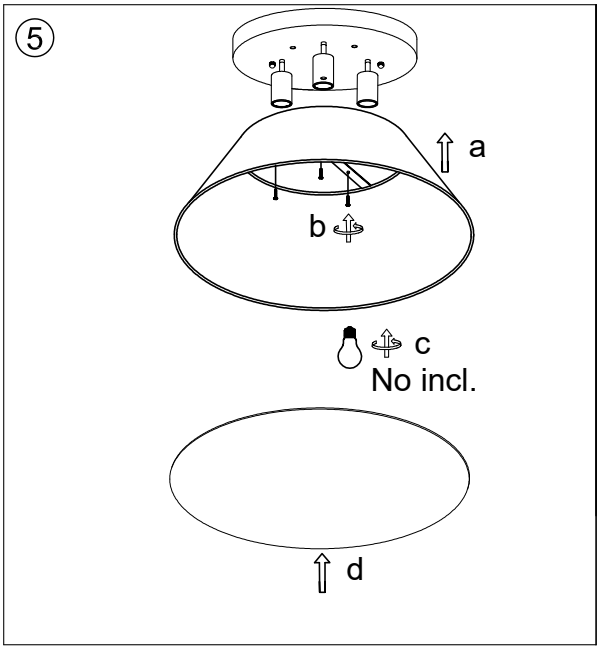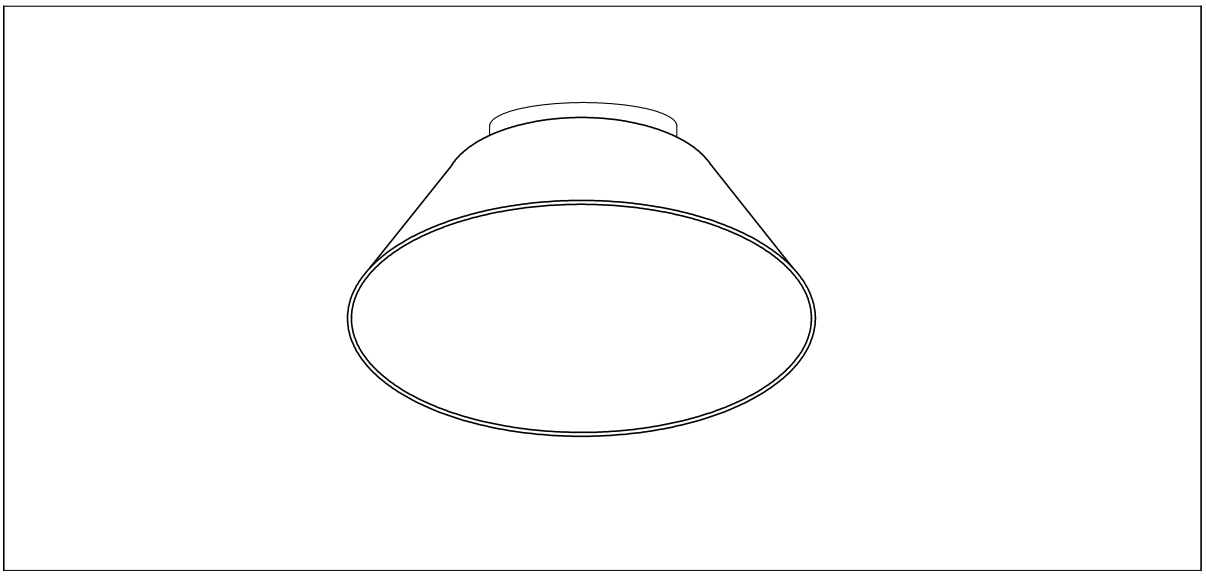
06.19