Brilliant
THE JEWEL IN LIGHTING

Relax
61111...

03.18

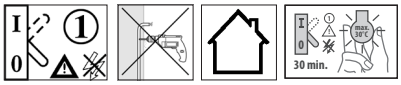

02

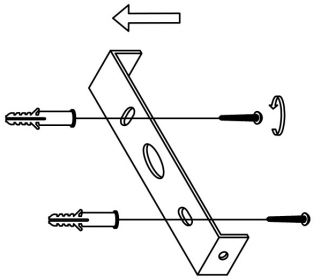

03

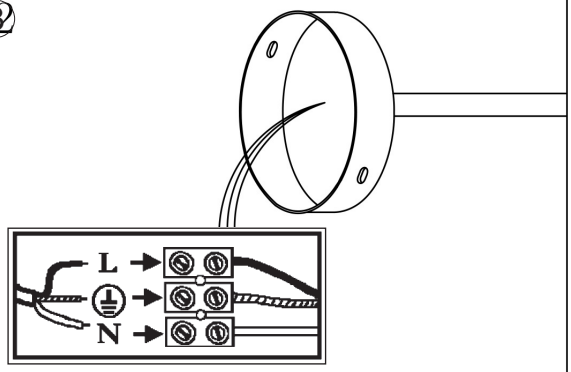

04

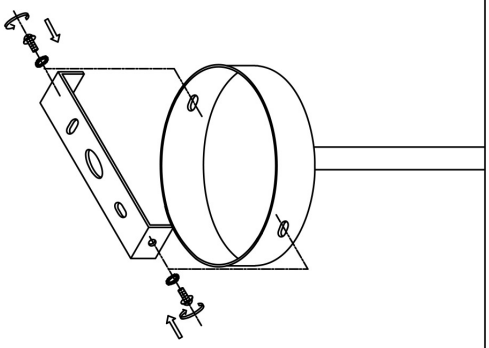
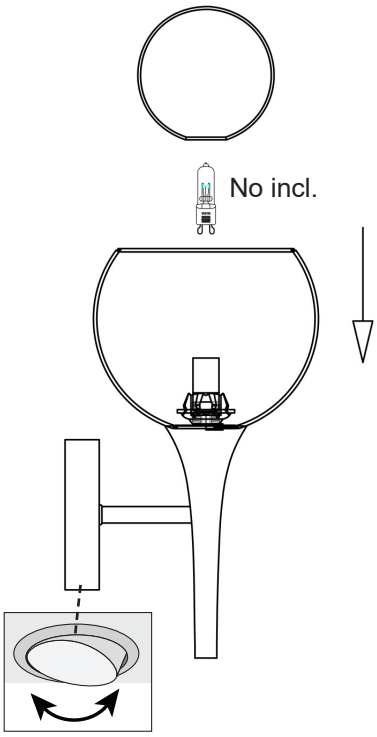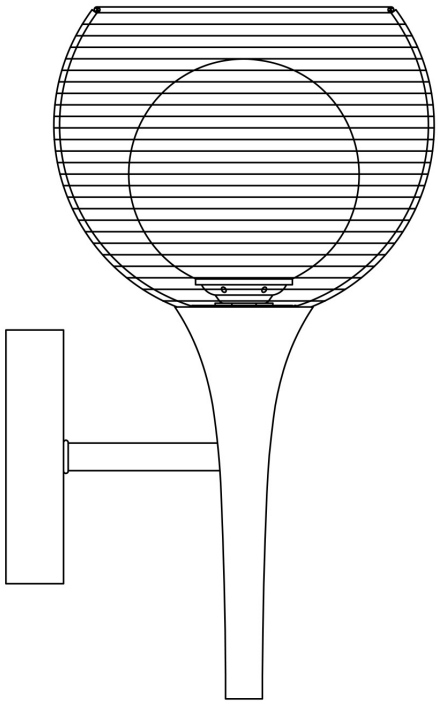
5