Brilliant

GALANCE

86810...
86813...
86830...
86831...

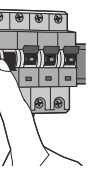

1 OFF

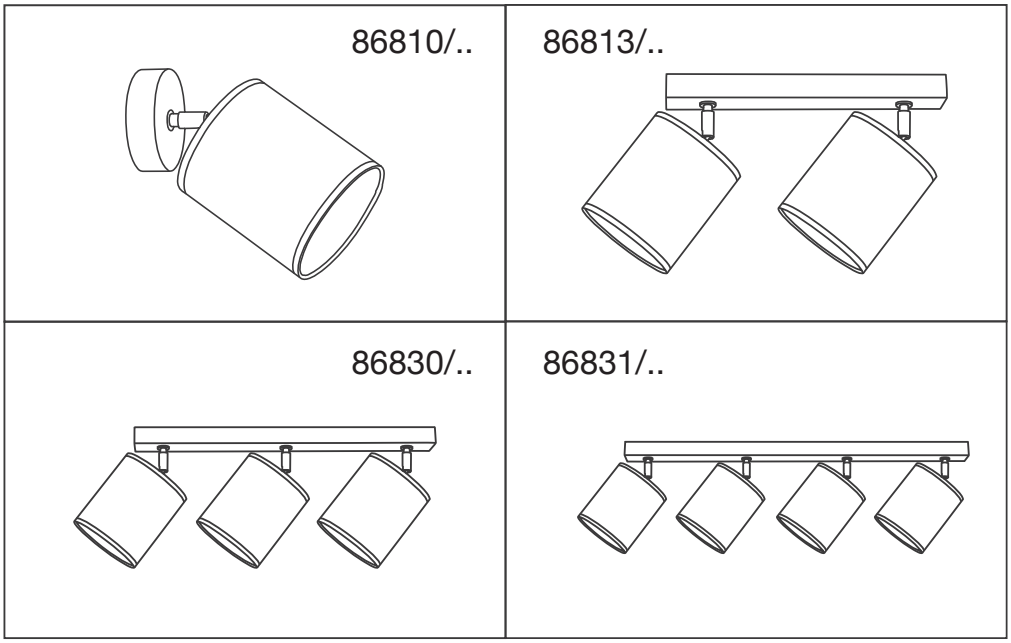

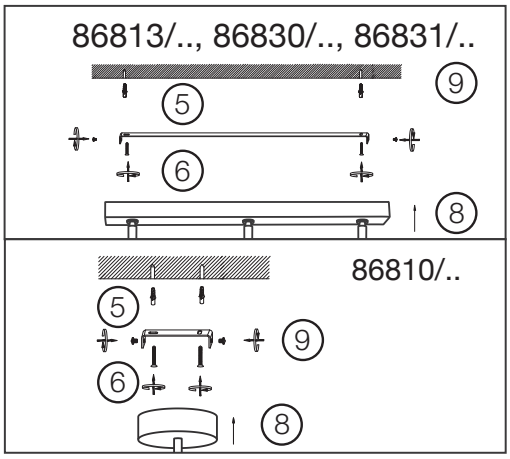

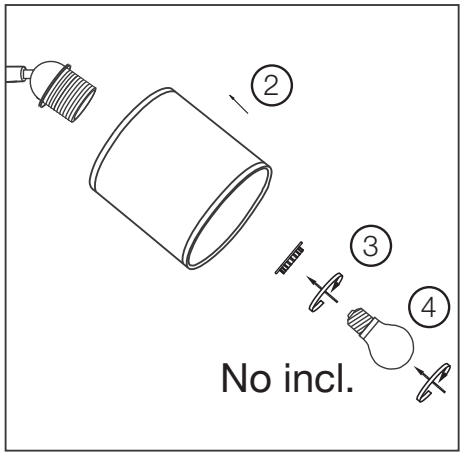

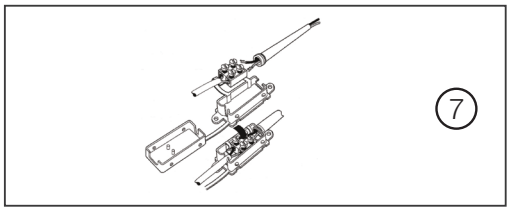

10 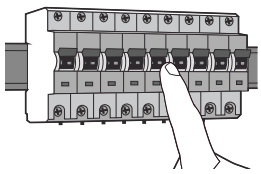 ON