Brilliant
THE JEWEL IN LIGHTING

Clarie
94949...
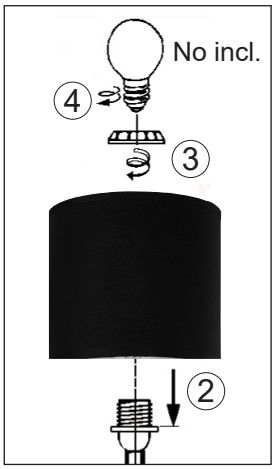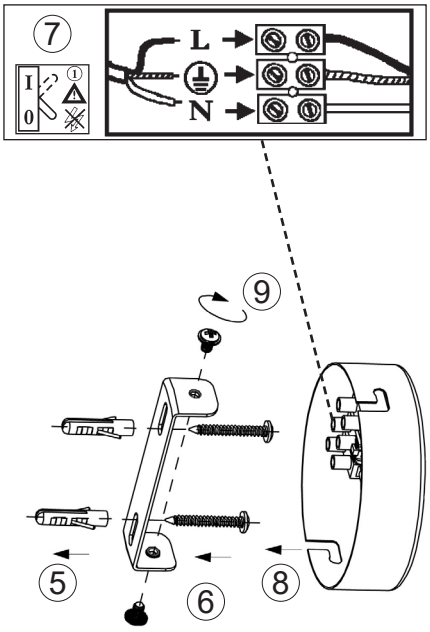
09.19