Brilliant
THE JEWEL IN LIGHTING

Flaka
82610...
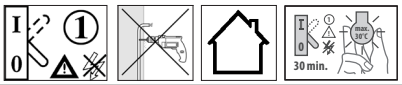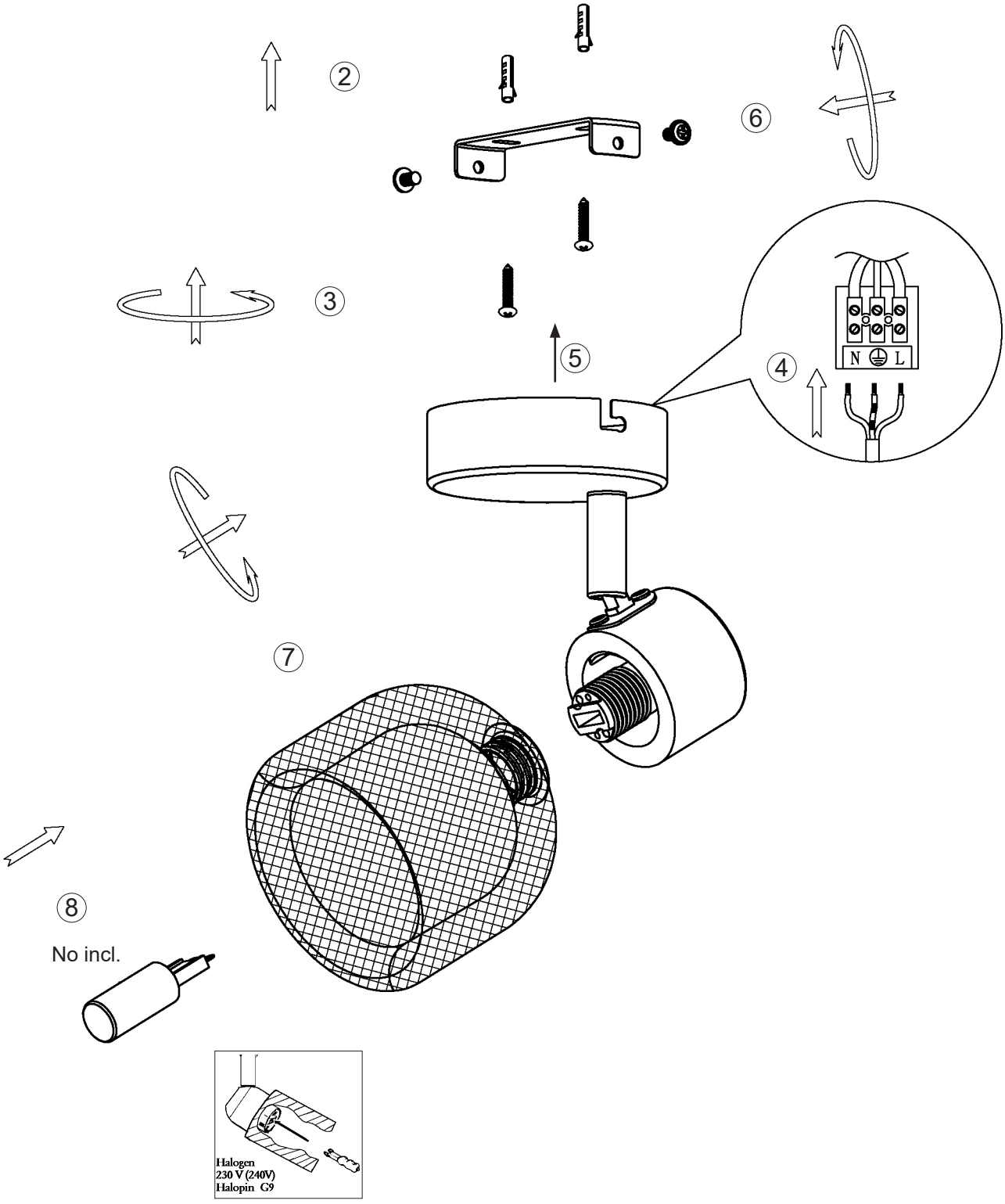
02.19