Brilliant
THE JEWEL IN LIGHTING

Flaka
82613...
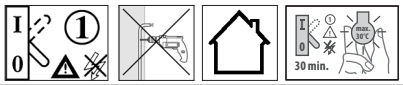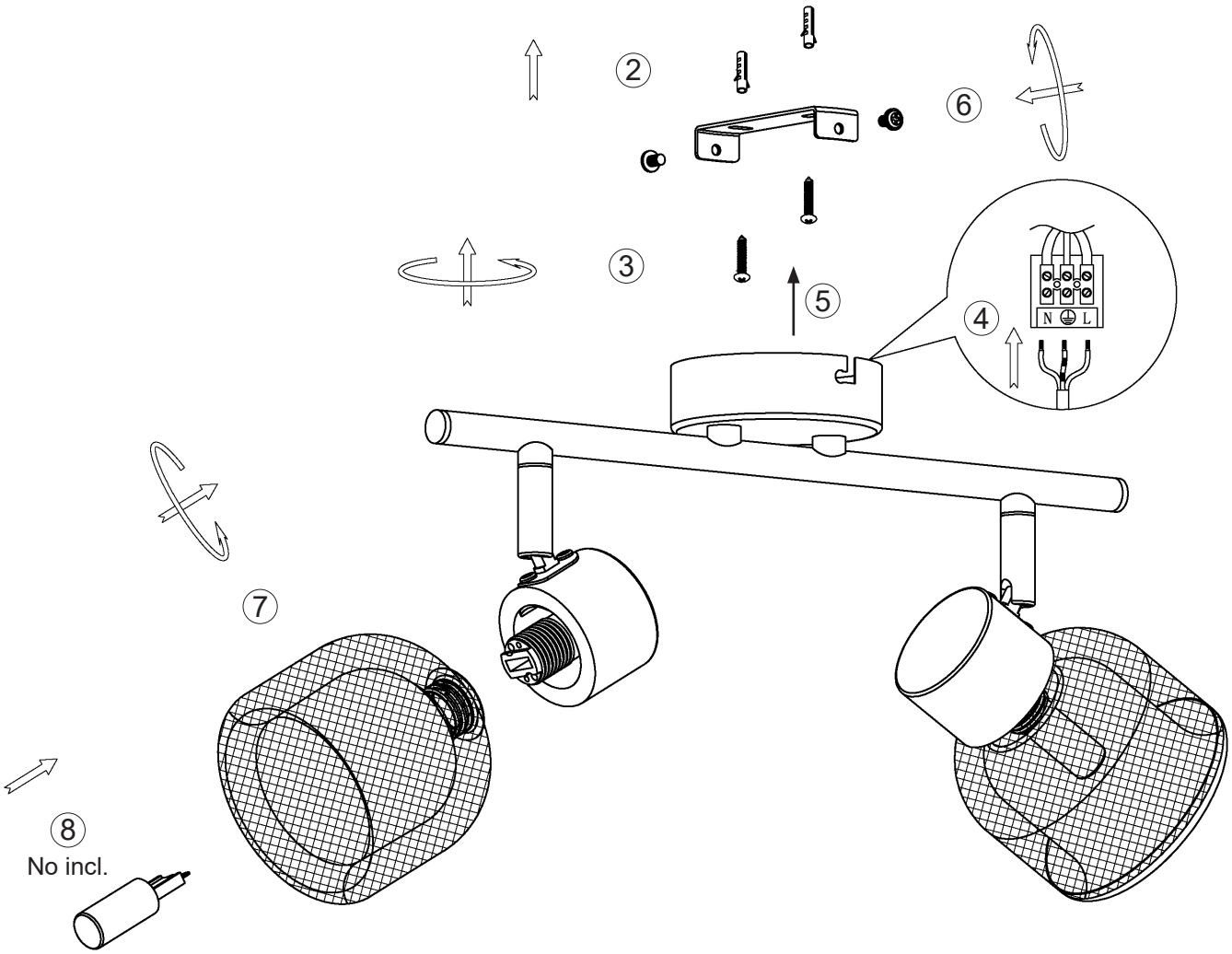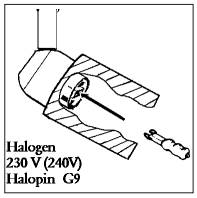
02.19