Brilliant

MATRIX WOOD
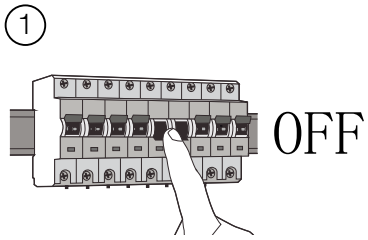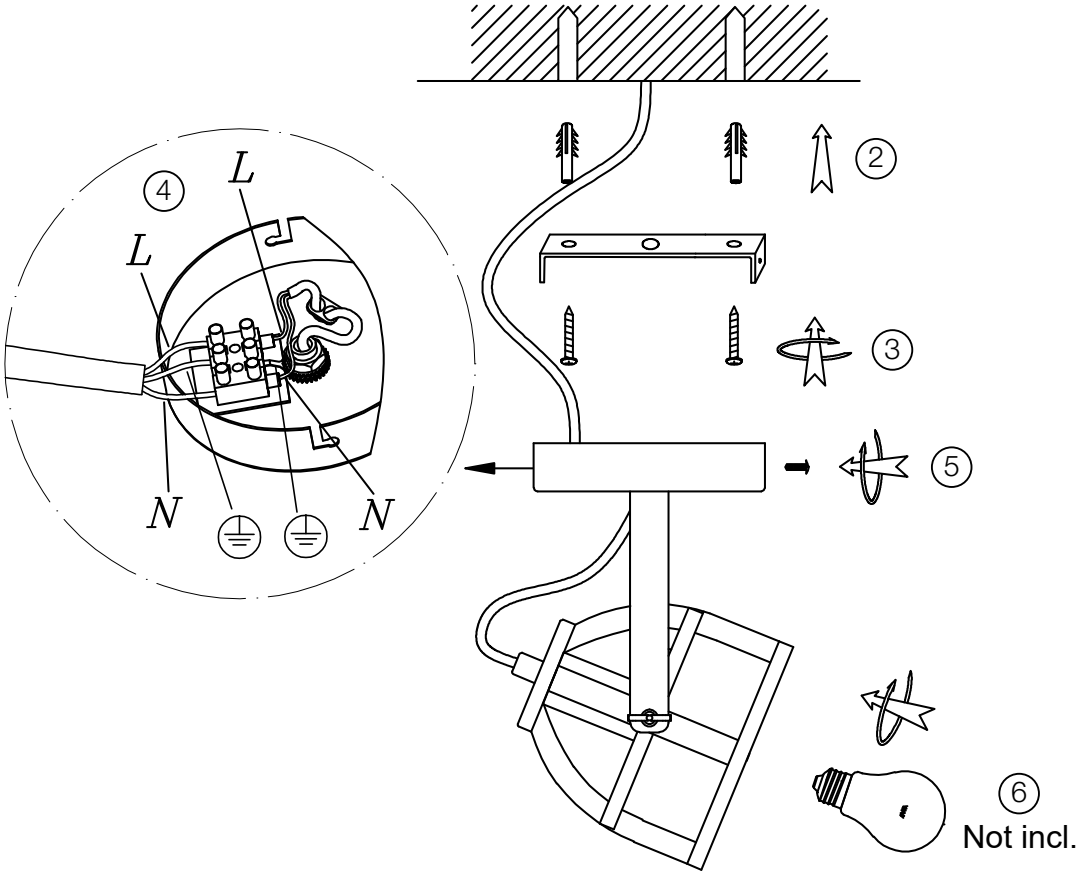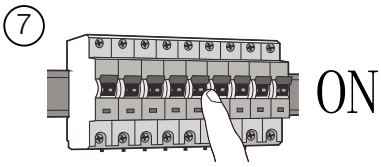
86610...