Brilliant
THE JEWEL IN LIGHTING

Elhi
71910...
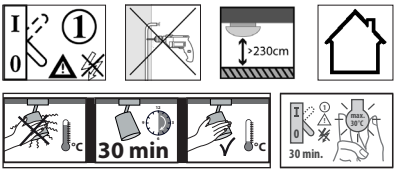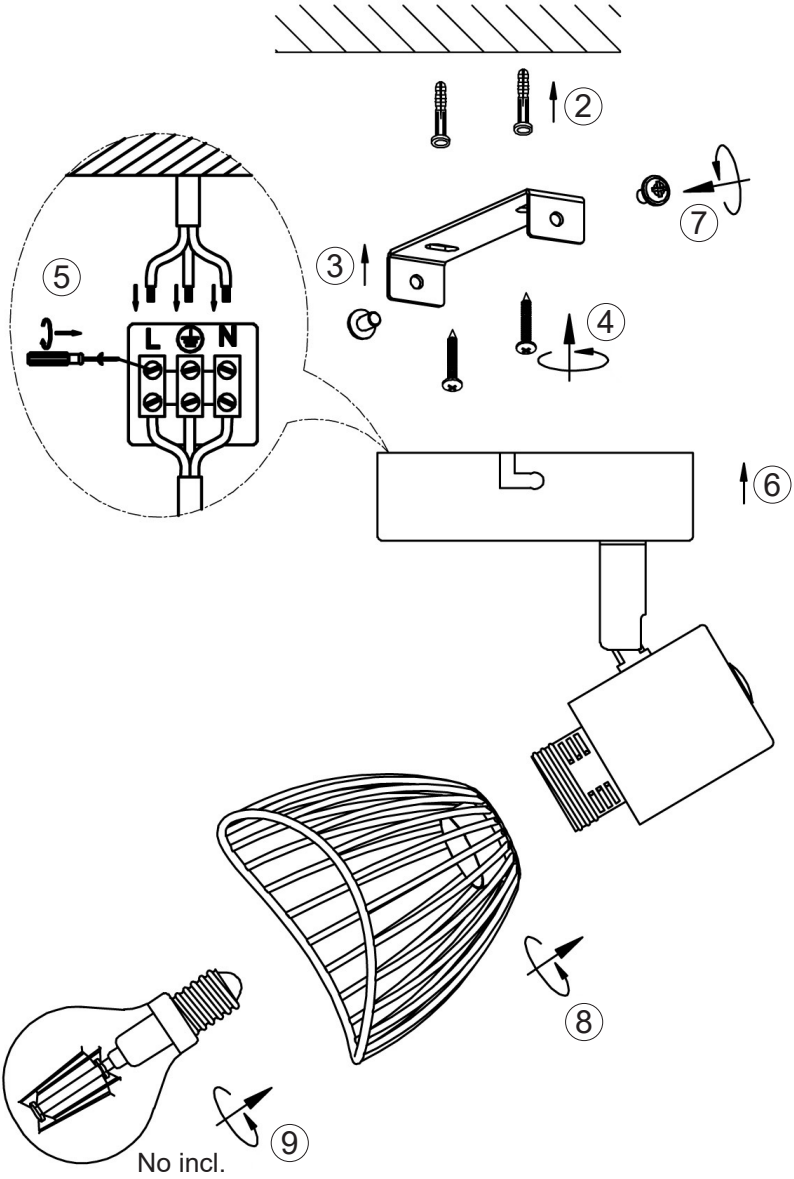
06.18