Brilliant
THE JEWEL IN LIGHTING

Plow
82129...

12.18

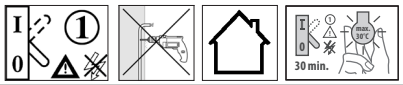

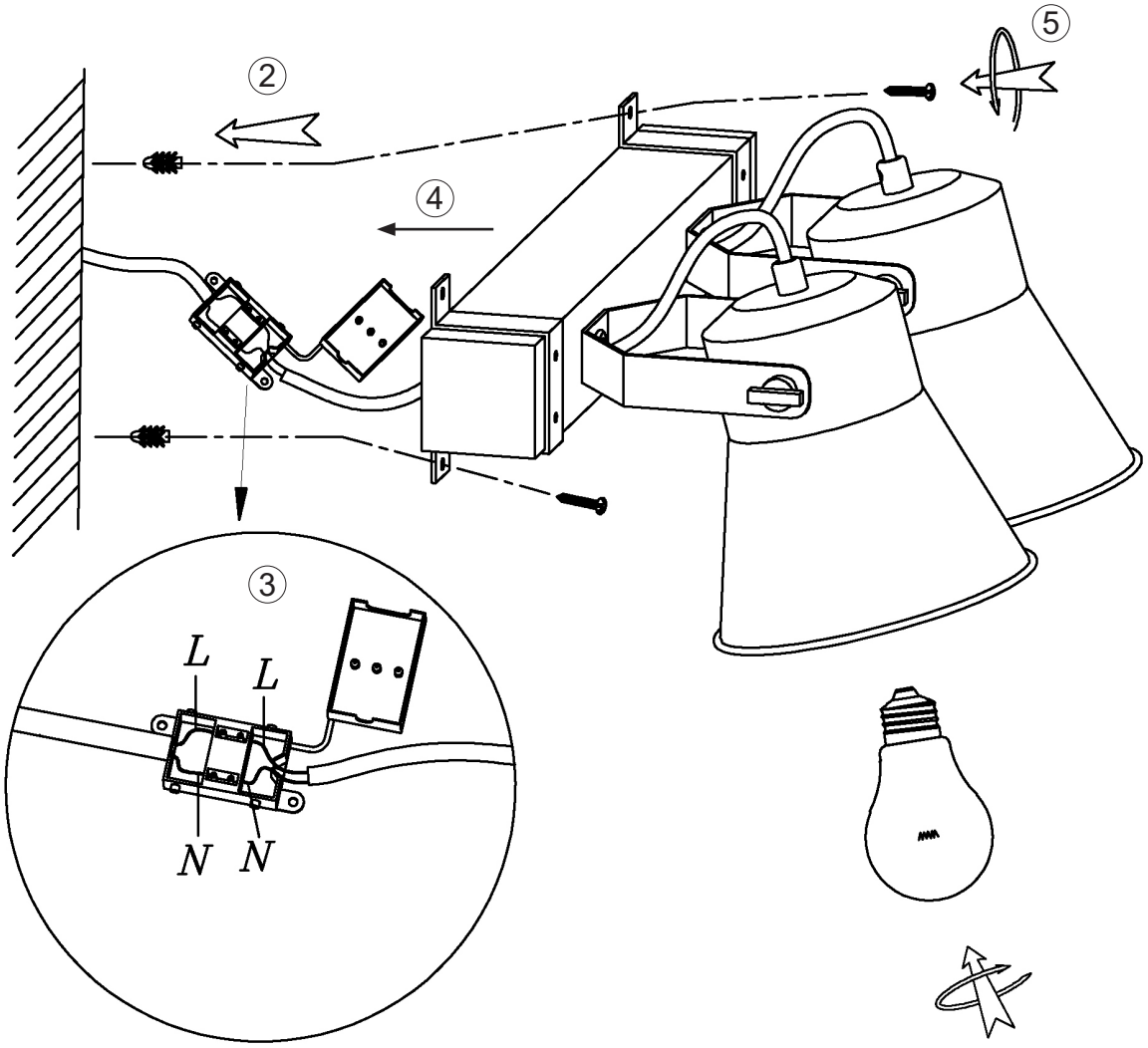

6

No incl.