Brilliant
THE JEWEL IN LIGHTING

Plow
82110...

12.18

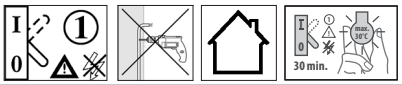

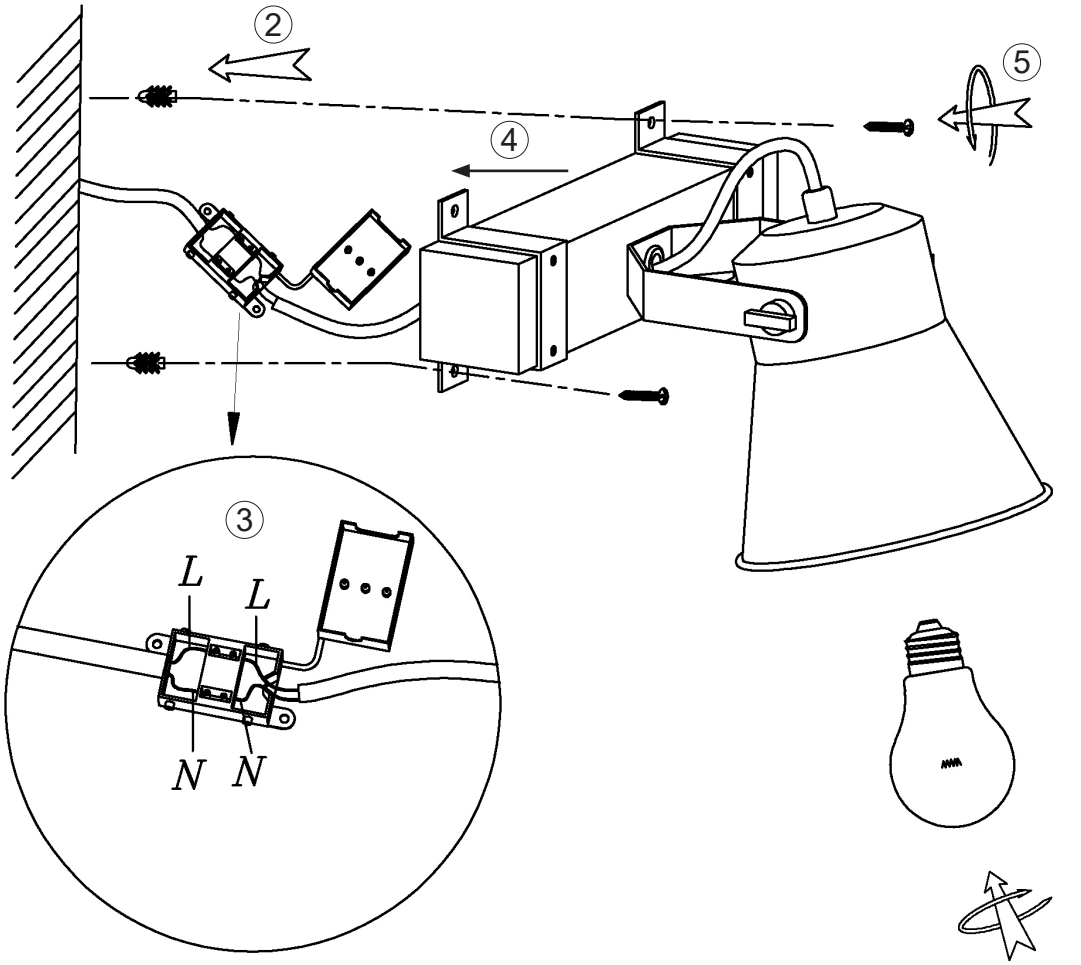

6
No incl.