Brilliant
THE JEWEL IN LIGHTING

# Chorus
# 43684...
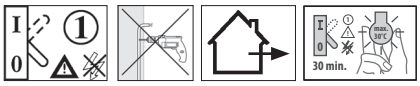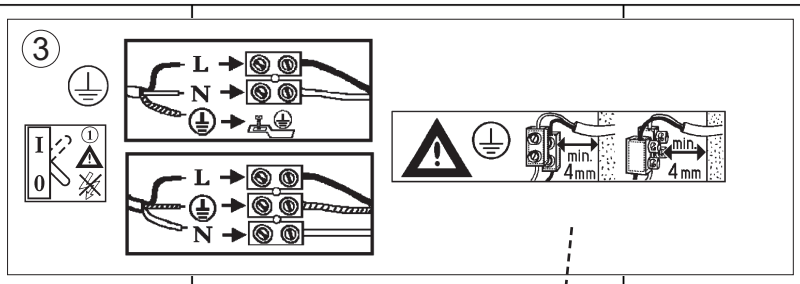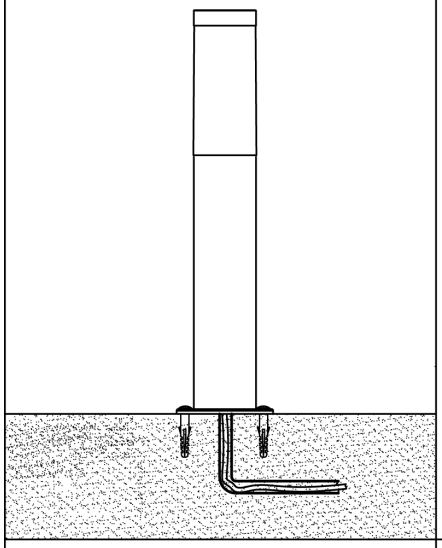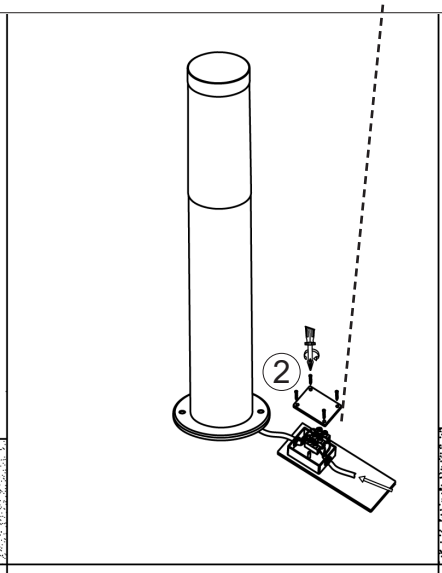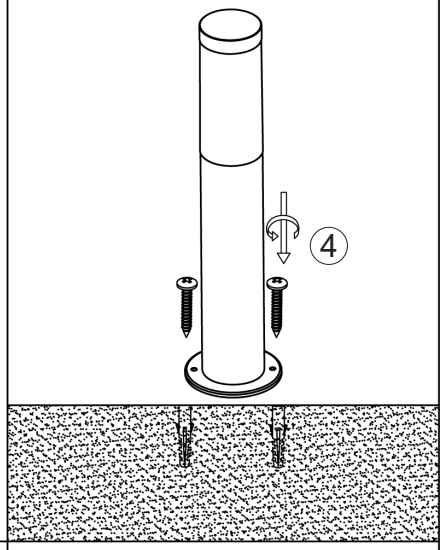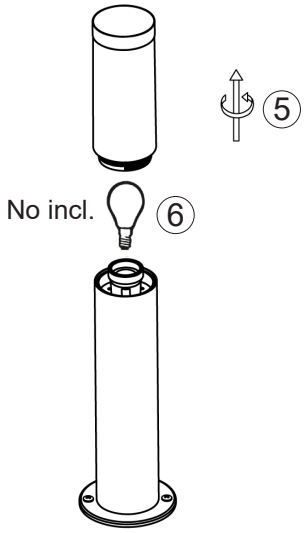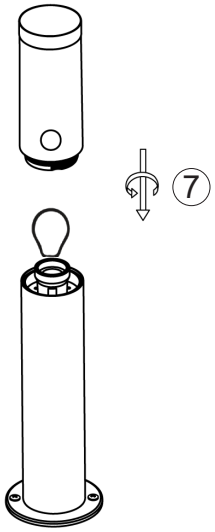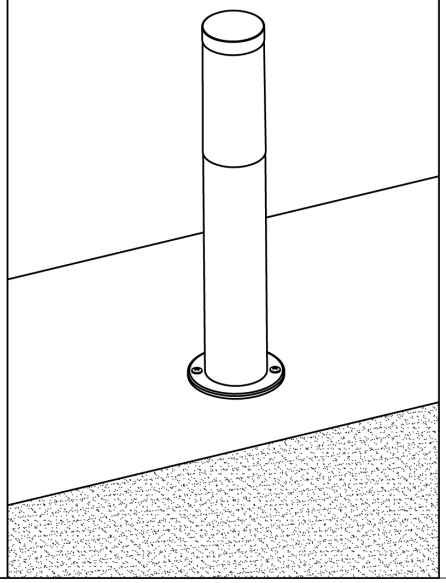
09.18