Brilliant
THE JEWEL IN LIGHTING

Beth
75593...
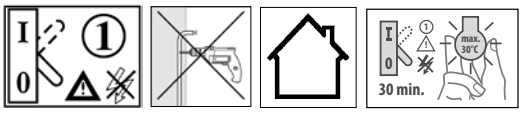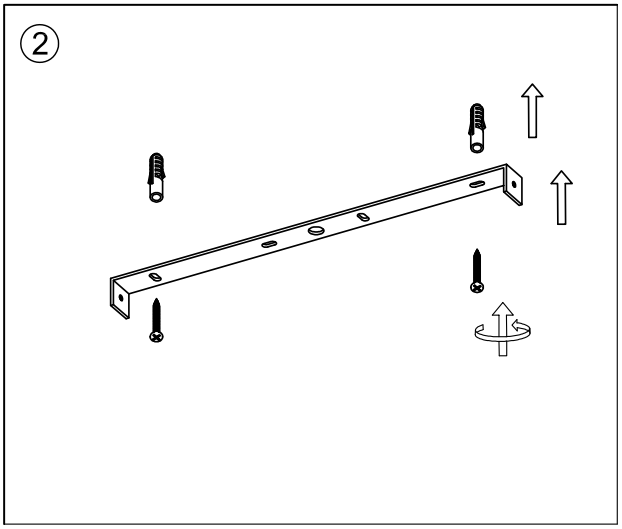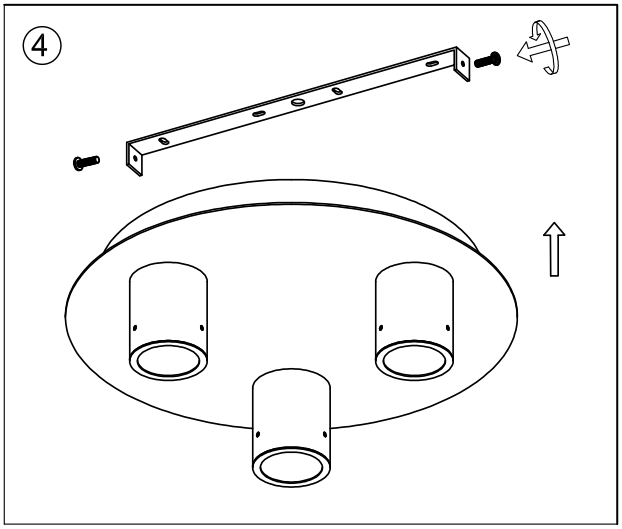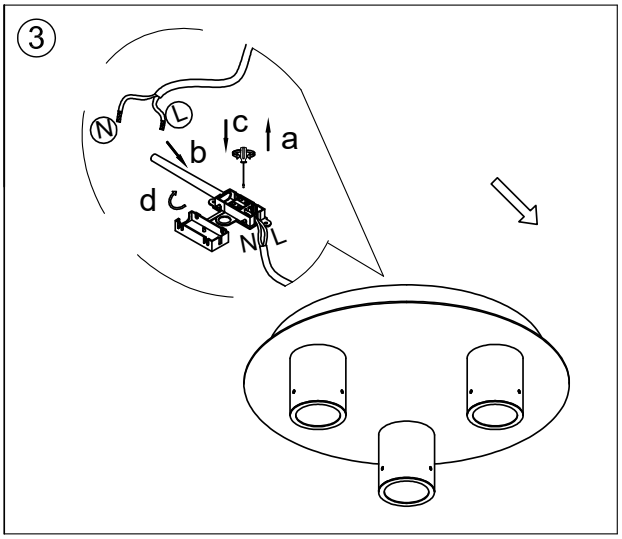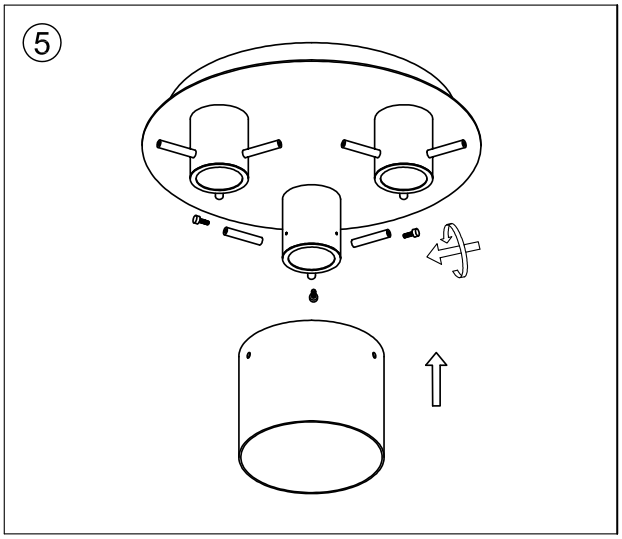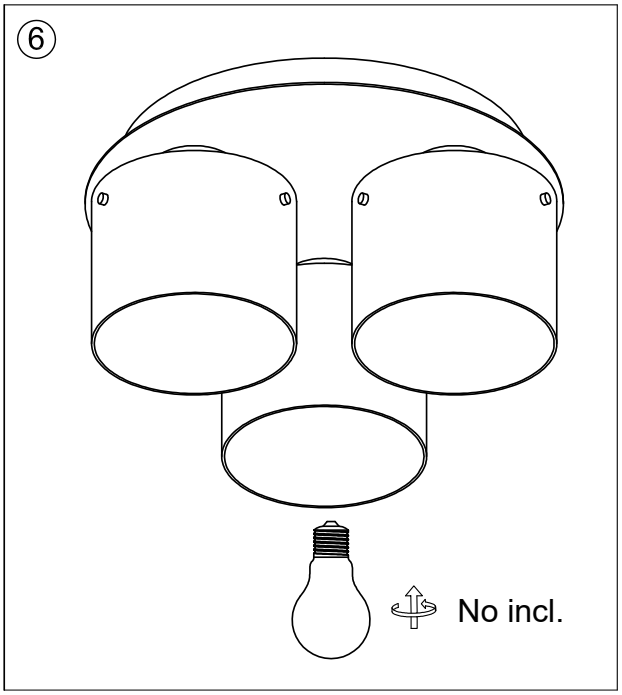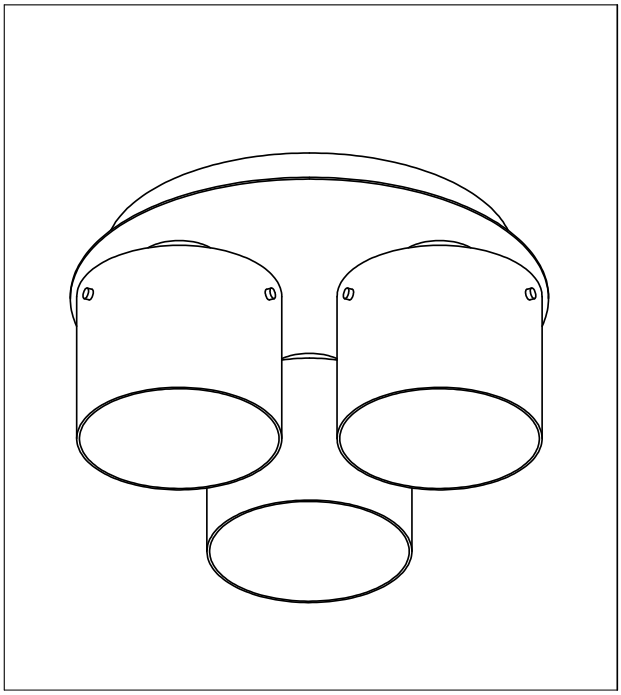
06.19