Brilliant
THE JEWEL IN LIGHTING

Beth
75570...
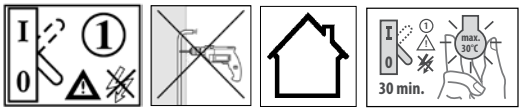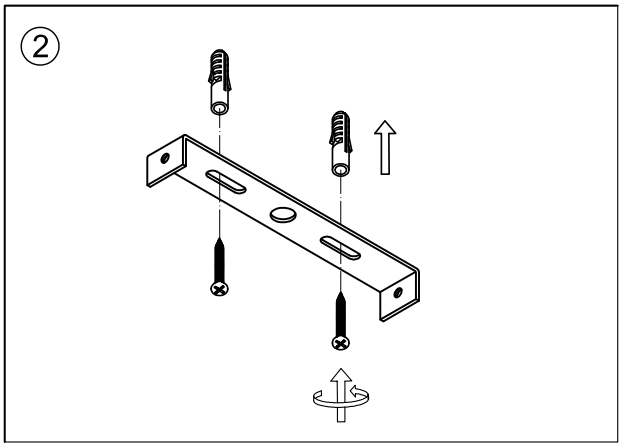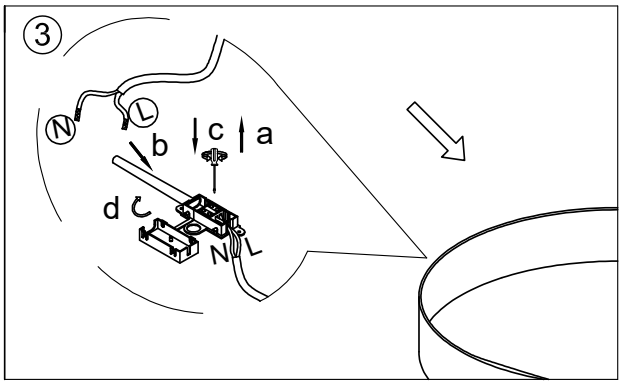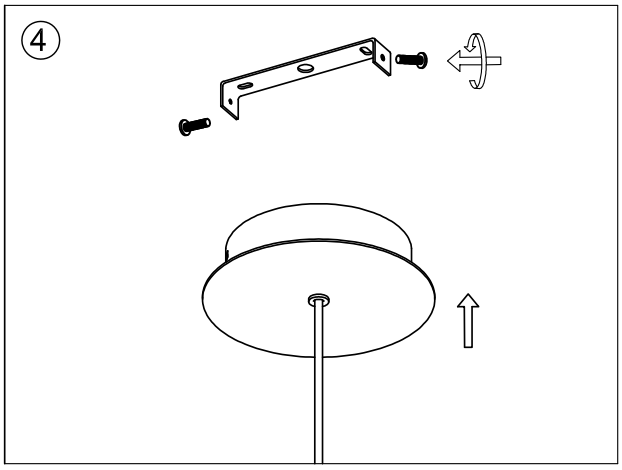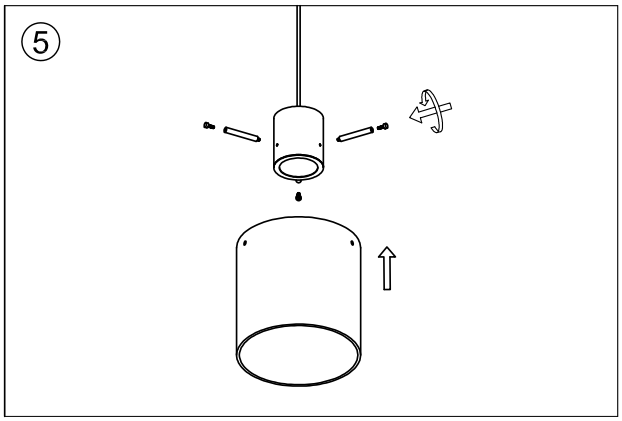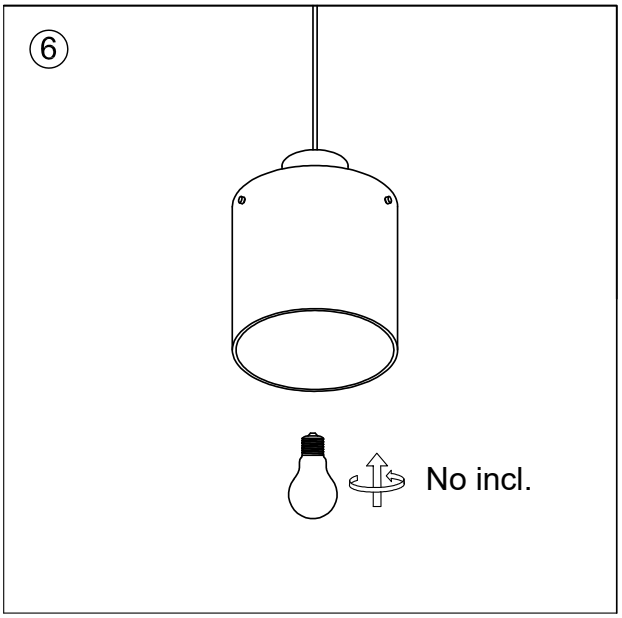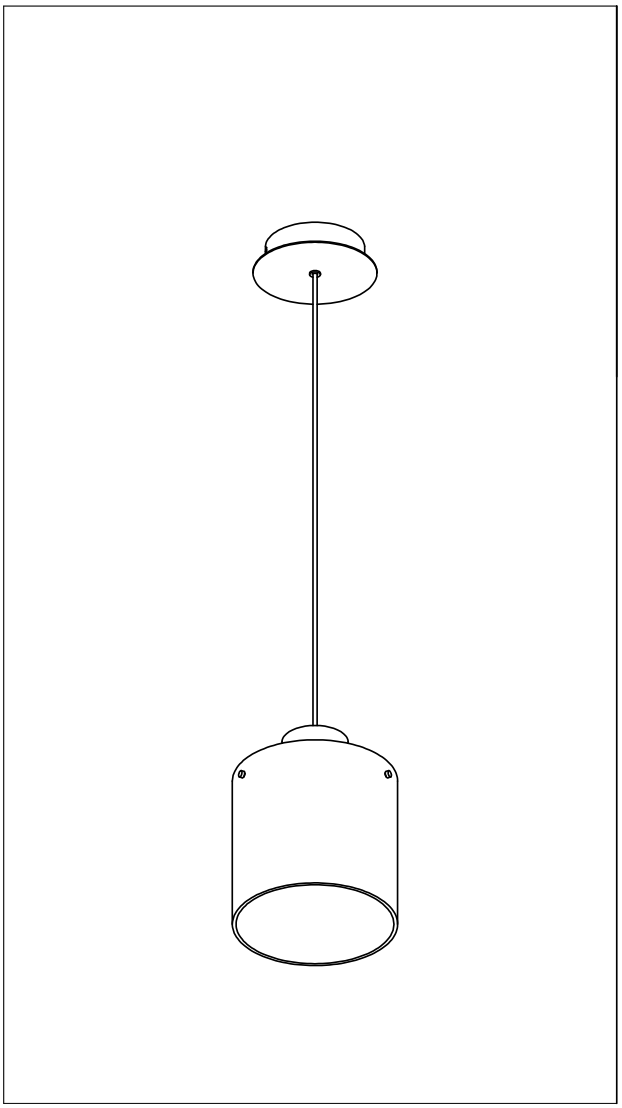
06.19