Brilliant
THE JEWEL IN LIGHTING

Beth
75573...
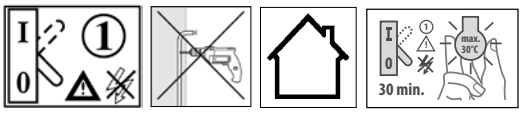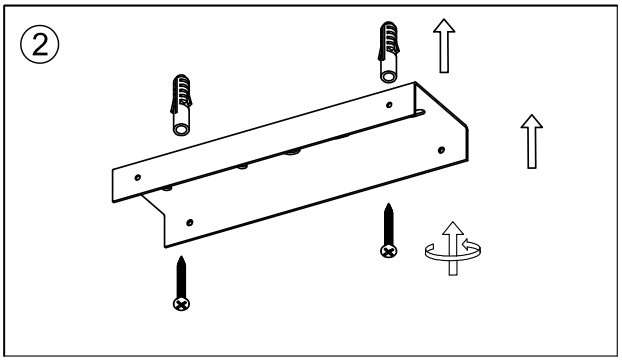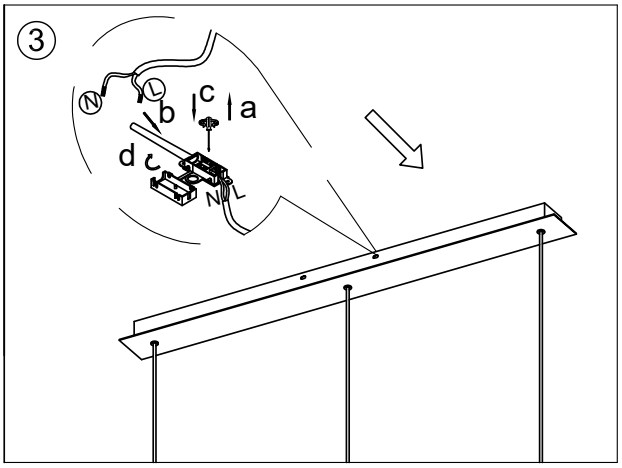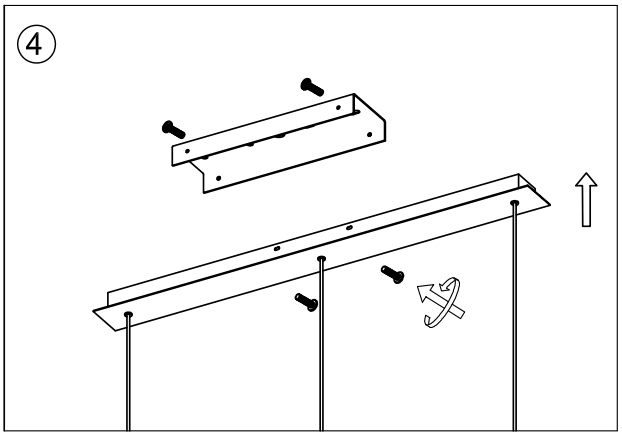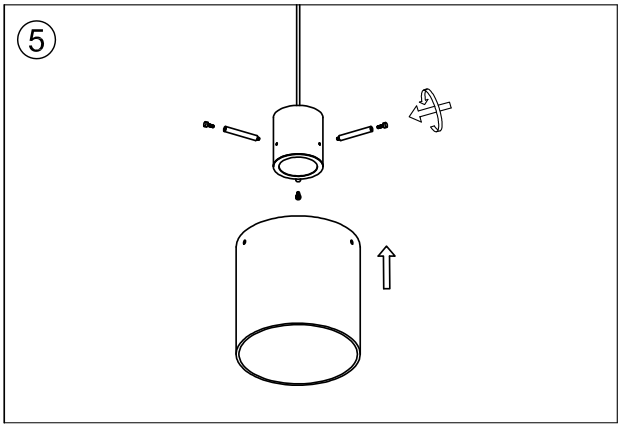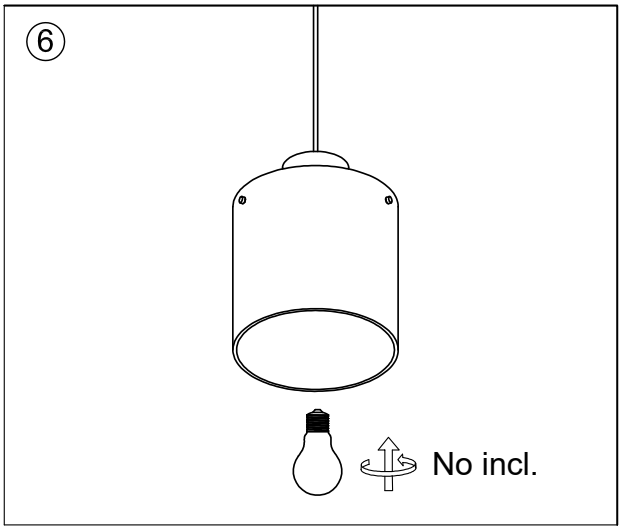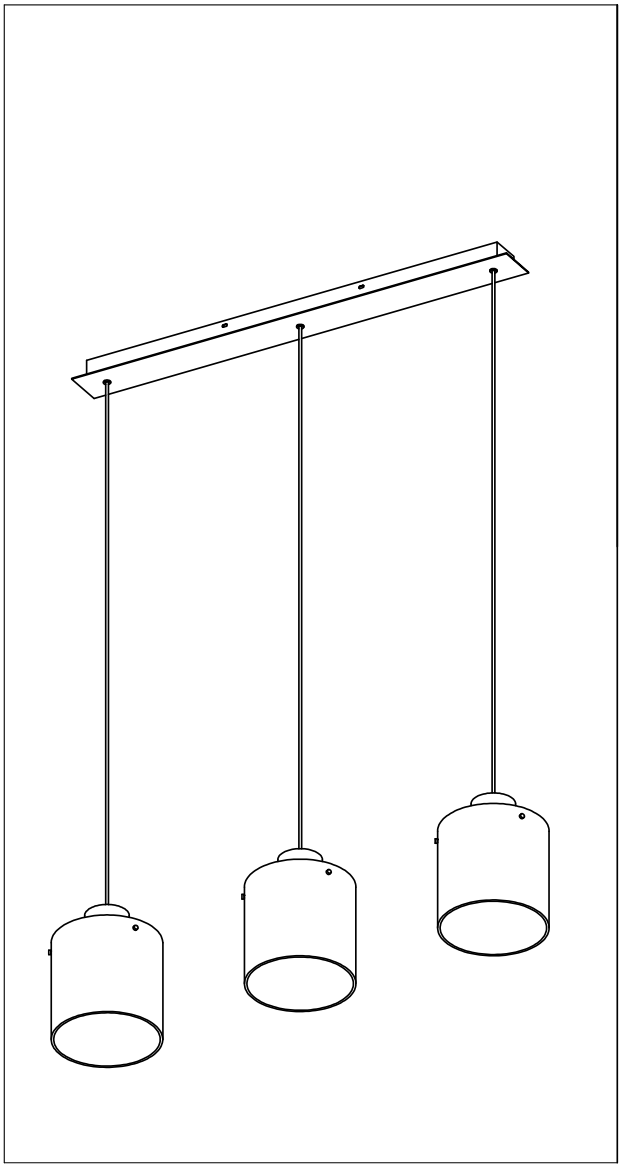
06.19