Brilliant
THE JEWEL IN LIGHTING

Manama
78170...
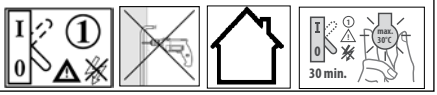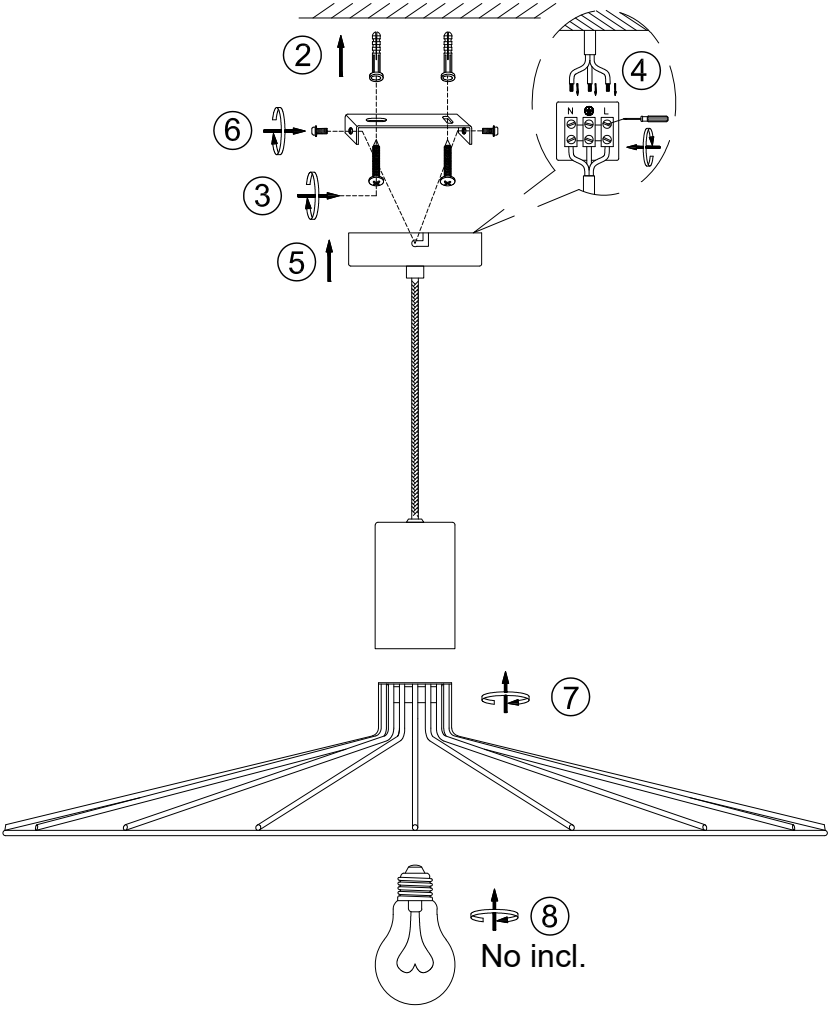
04.19