Brilliant
THE JEWEL IN LIGHTING

Cabar
96372...
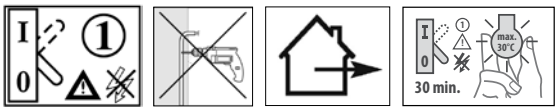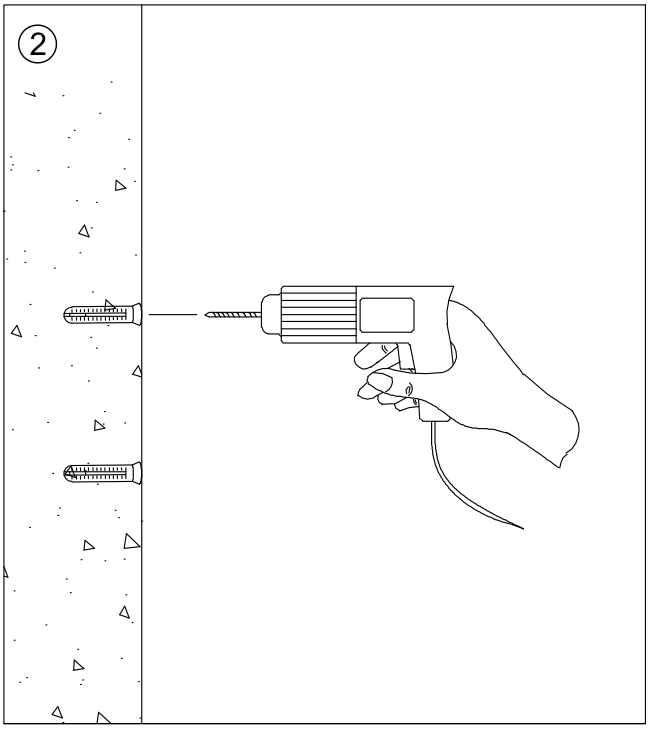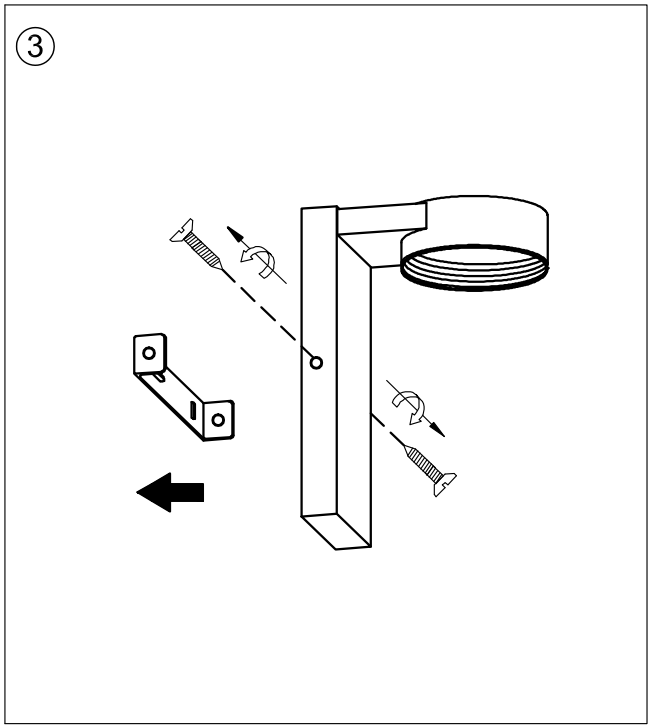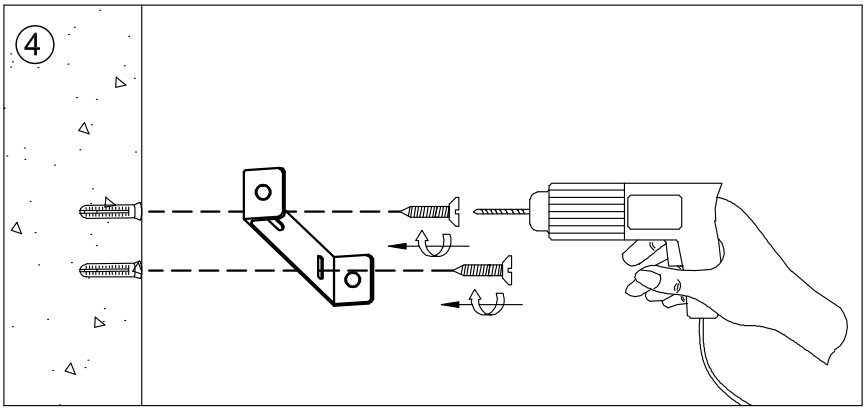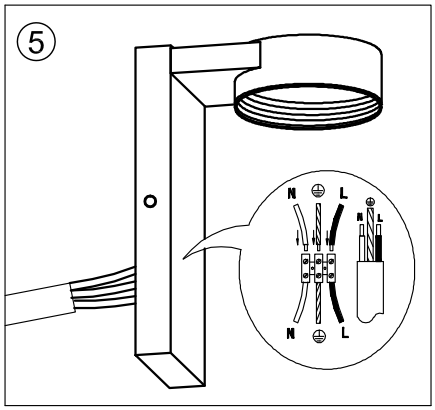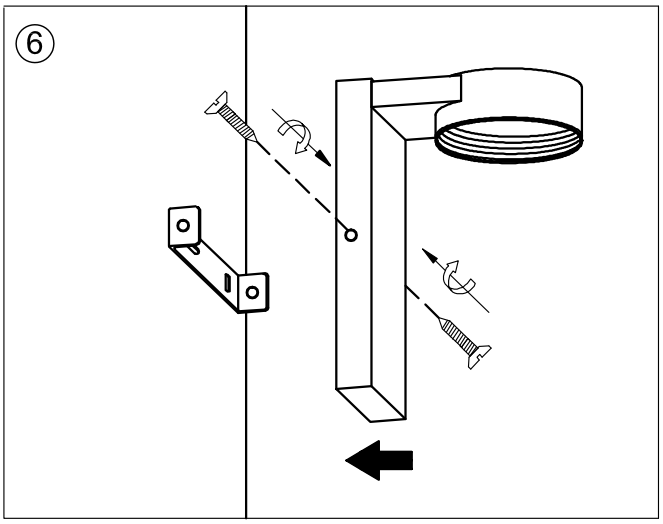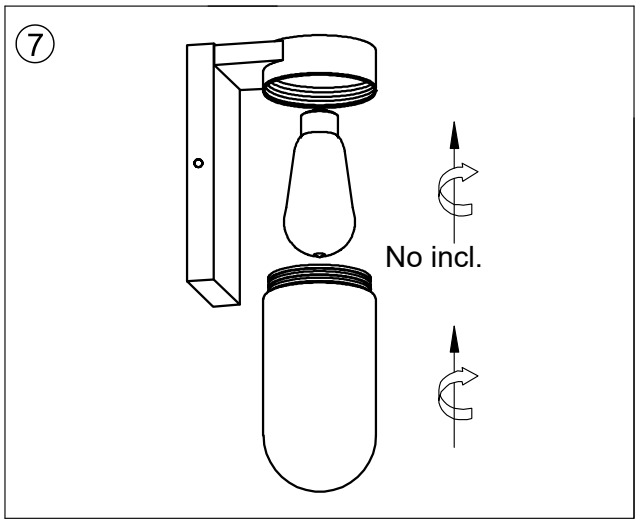
08.19