Brilliant
THE JEWEL IN LIGHTING

Cabar
96373...
96374...
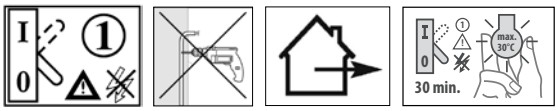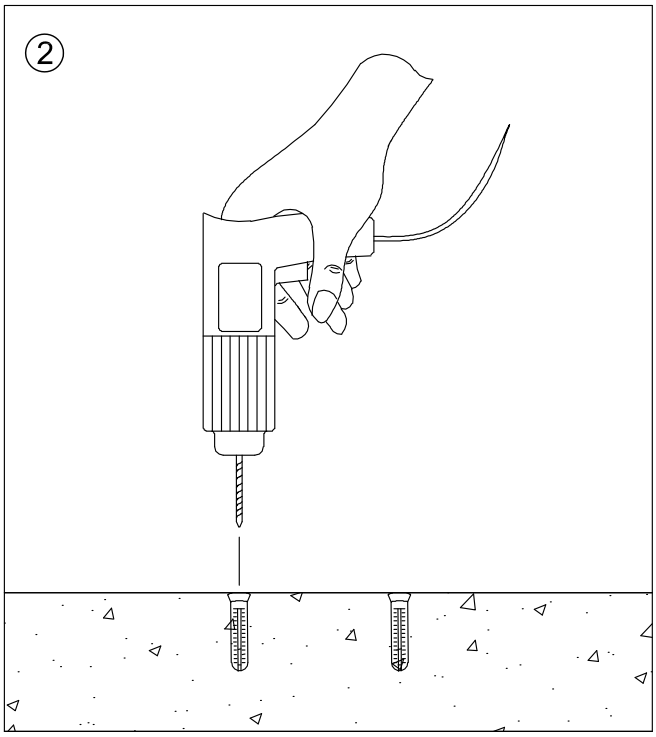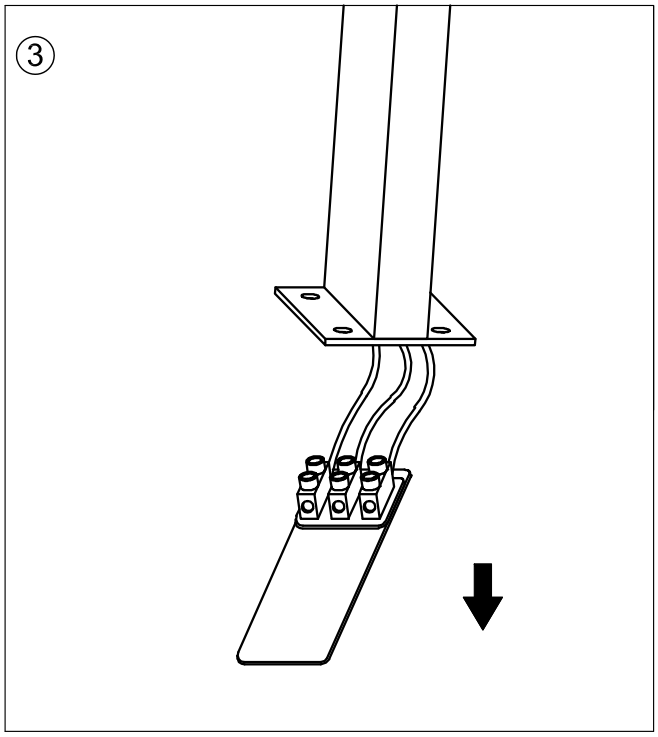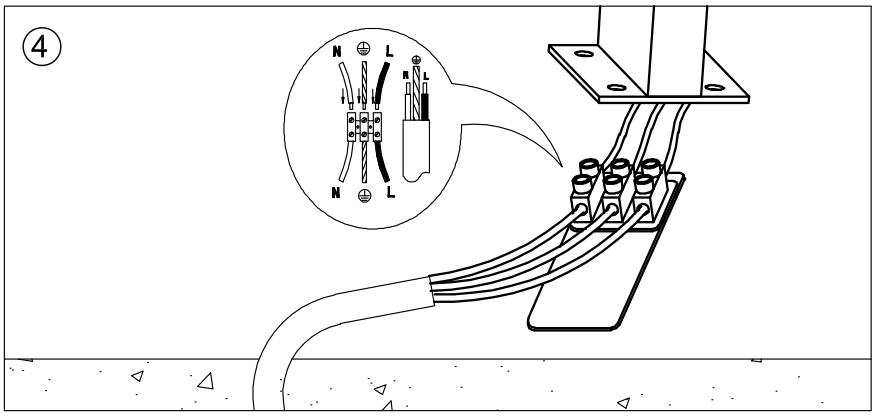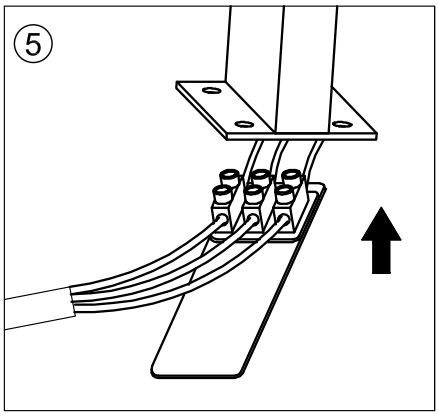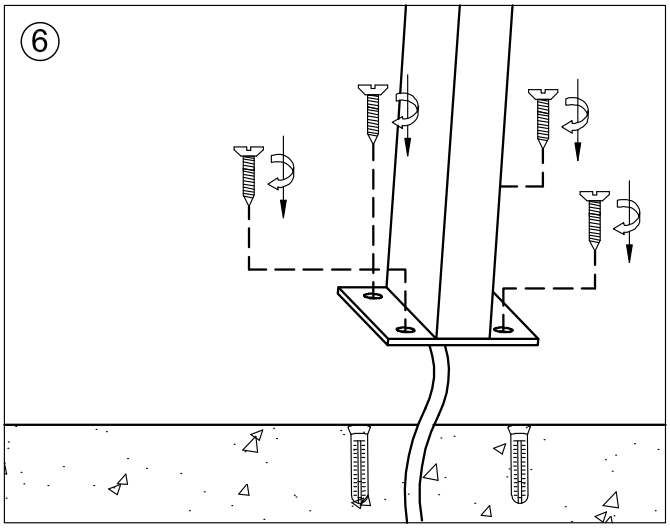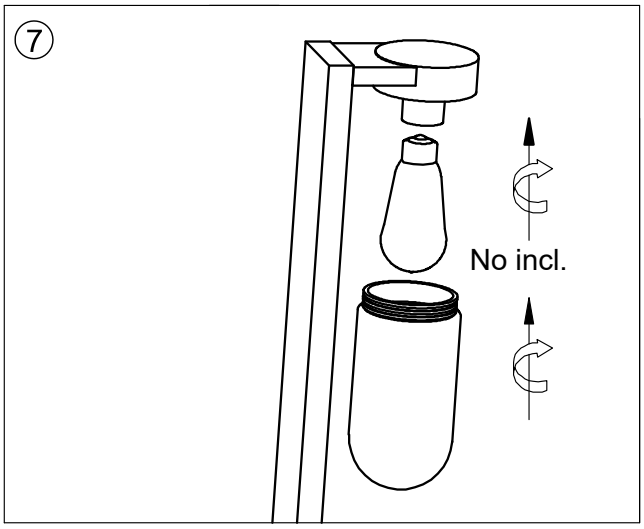
08.19