Brilliant

GALANCE

97166...

1

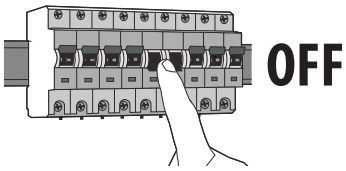

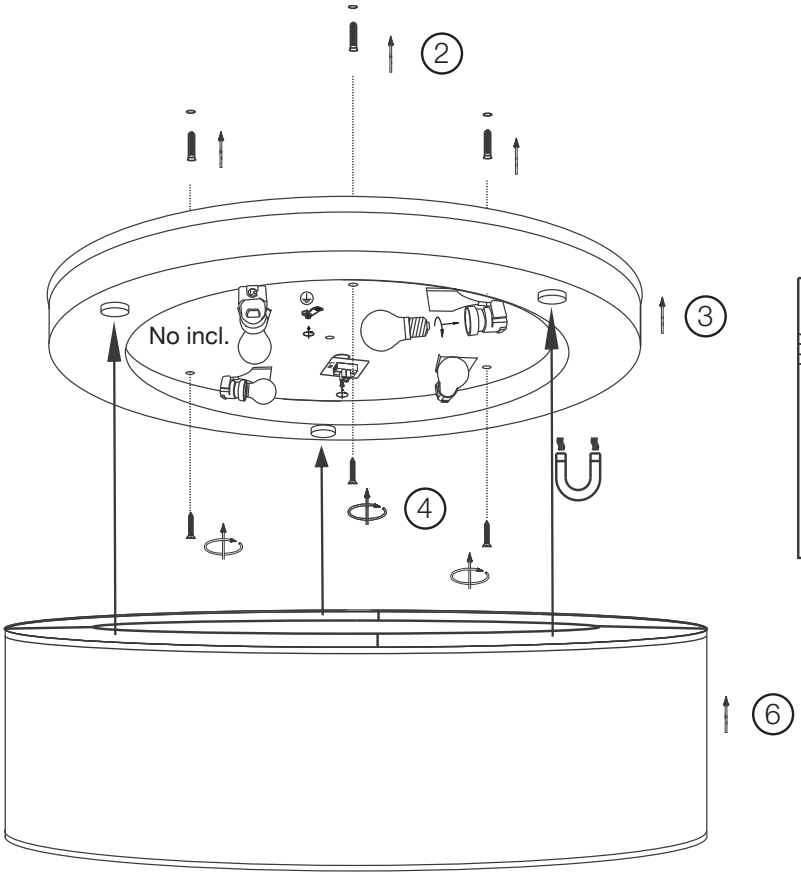

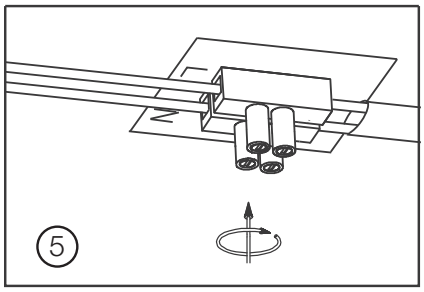
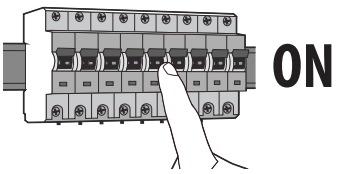
7