Brilliant
THE JEWEL IN LIGHTING

York
44781...
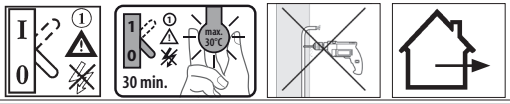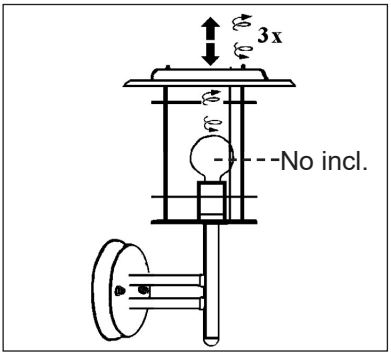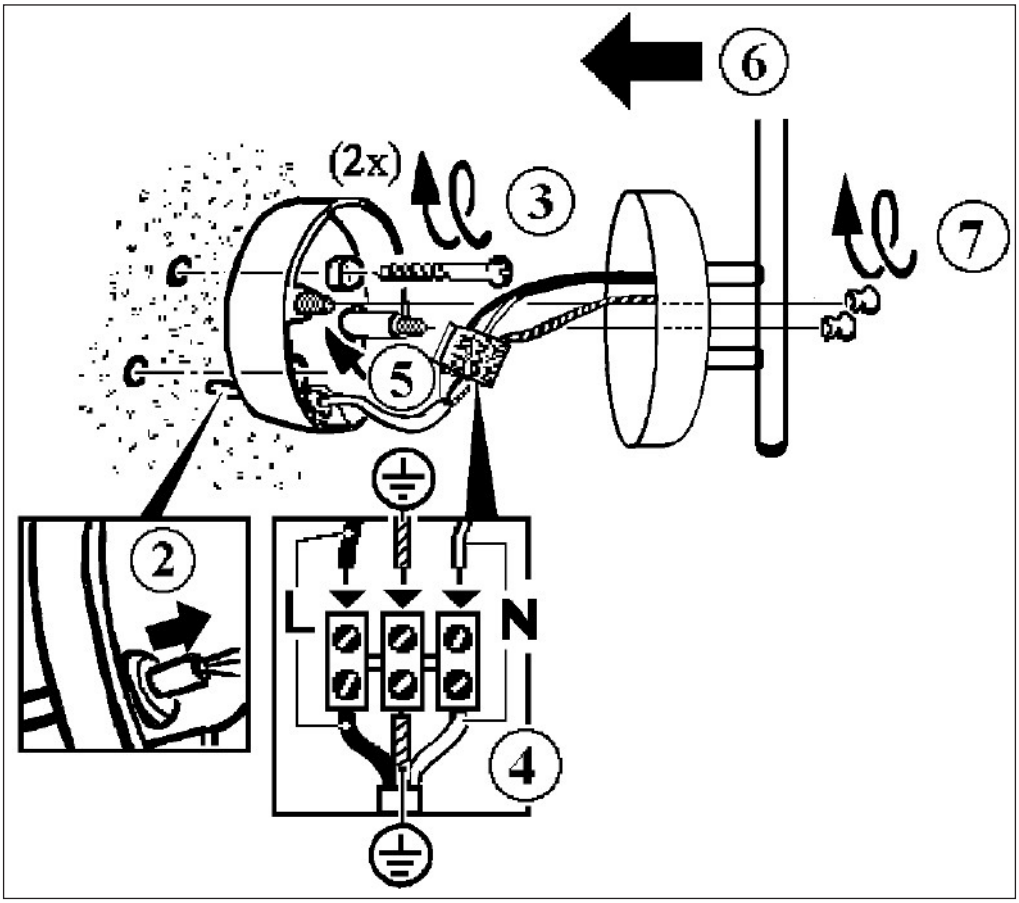
12.17