Brilliant
THE JEWEL IN LIGHTING

York
44797...
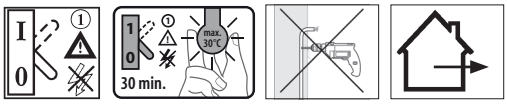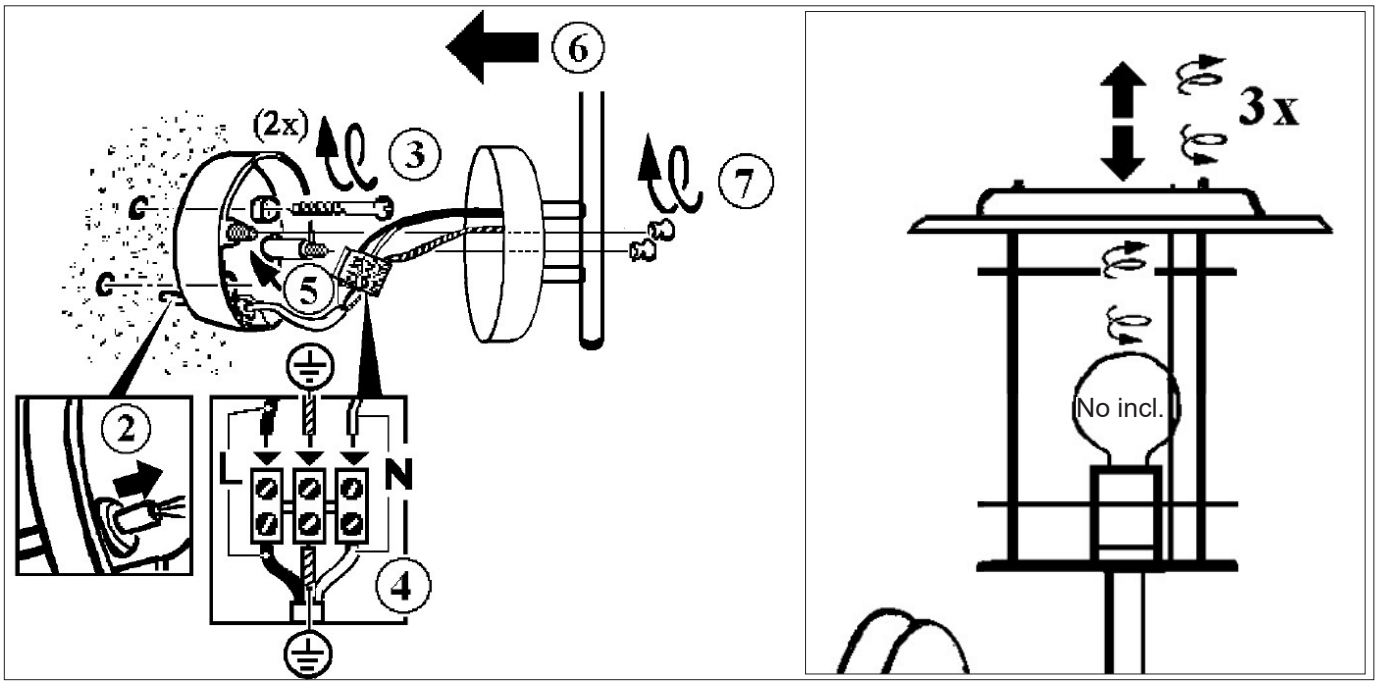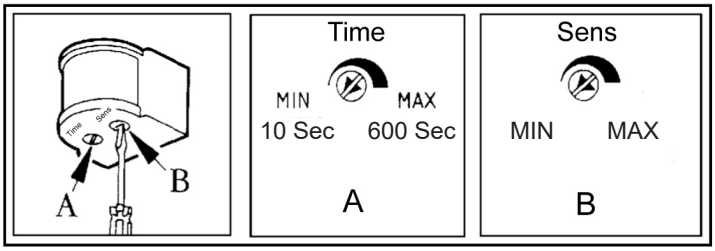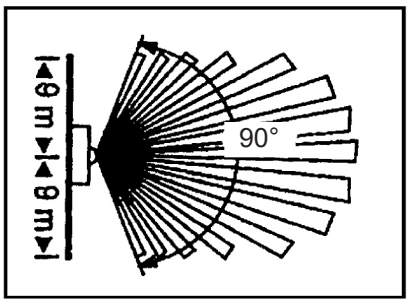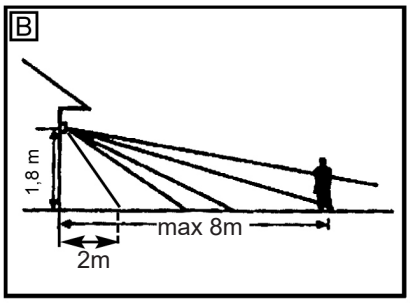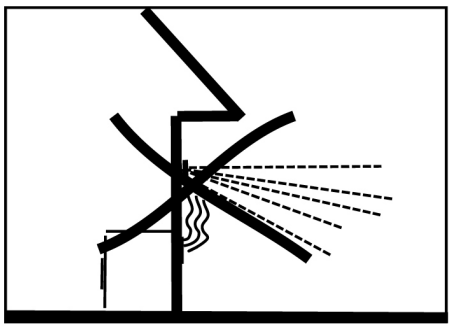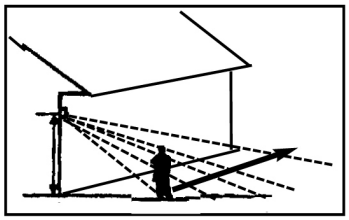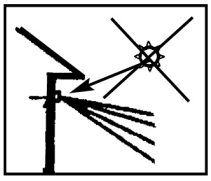
02.19