Brilliant
THE JEWEL IN LIGHTING

York STA BEW
44799...

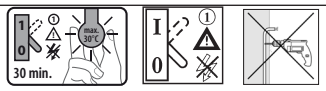
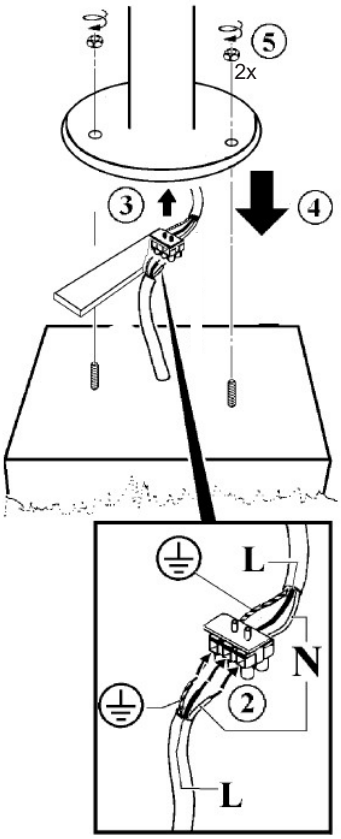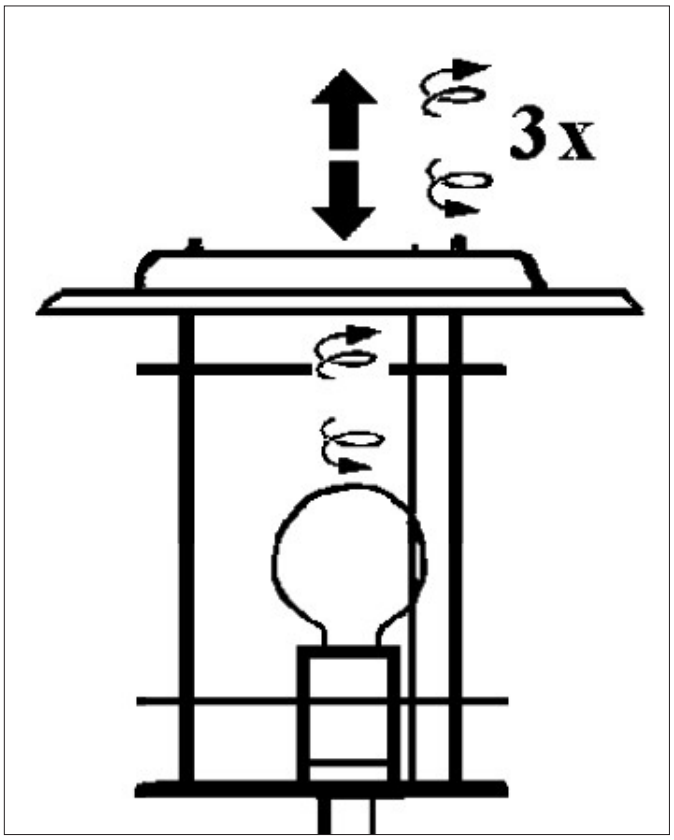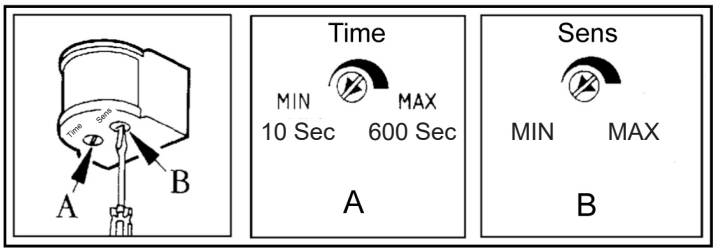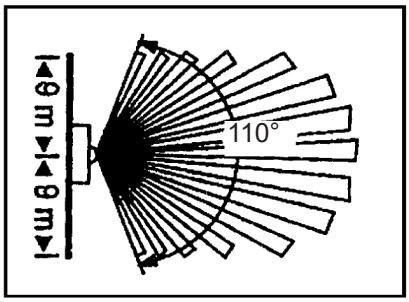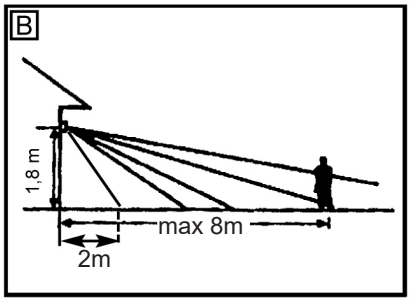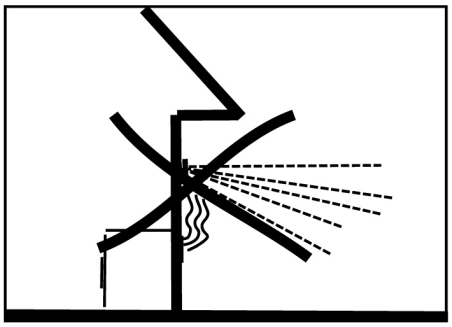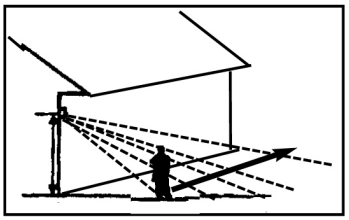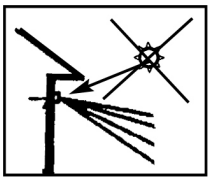
08.16