INSTRUCTION SHEET

Brilliant

WOODROW
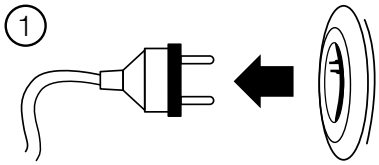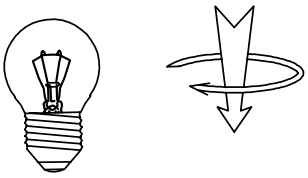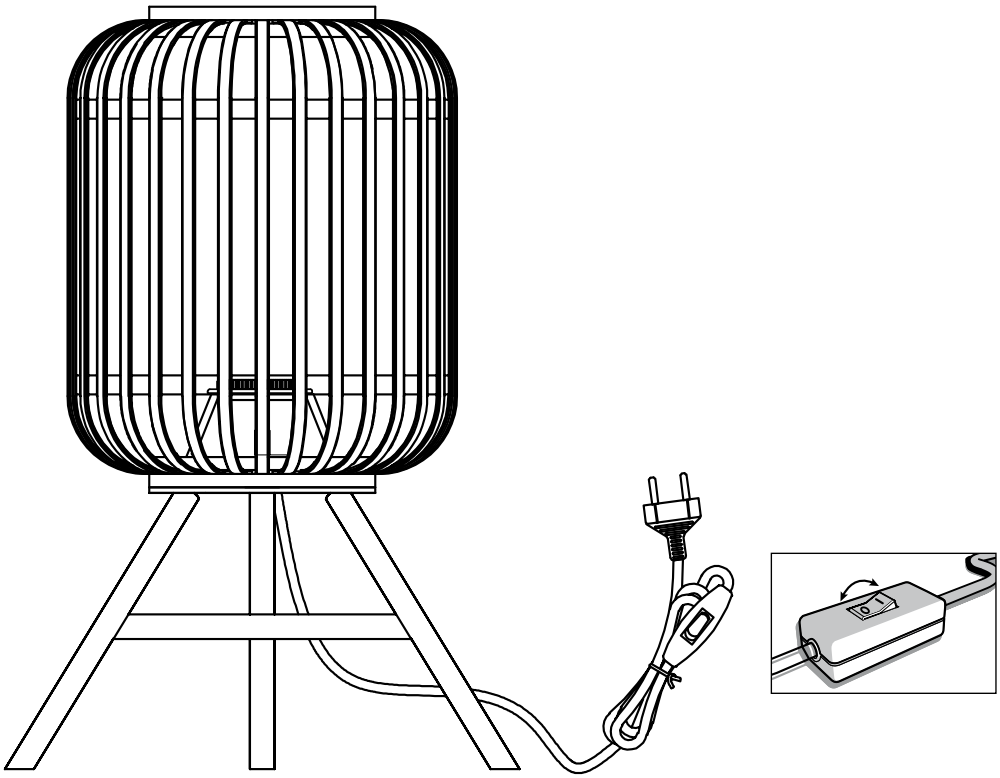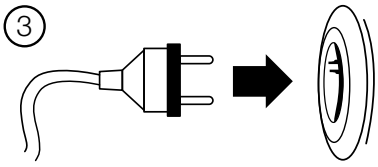
93775...