Brilliant

WOODROW
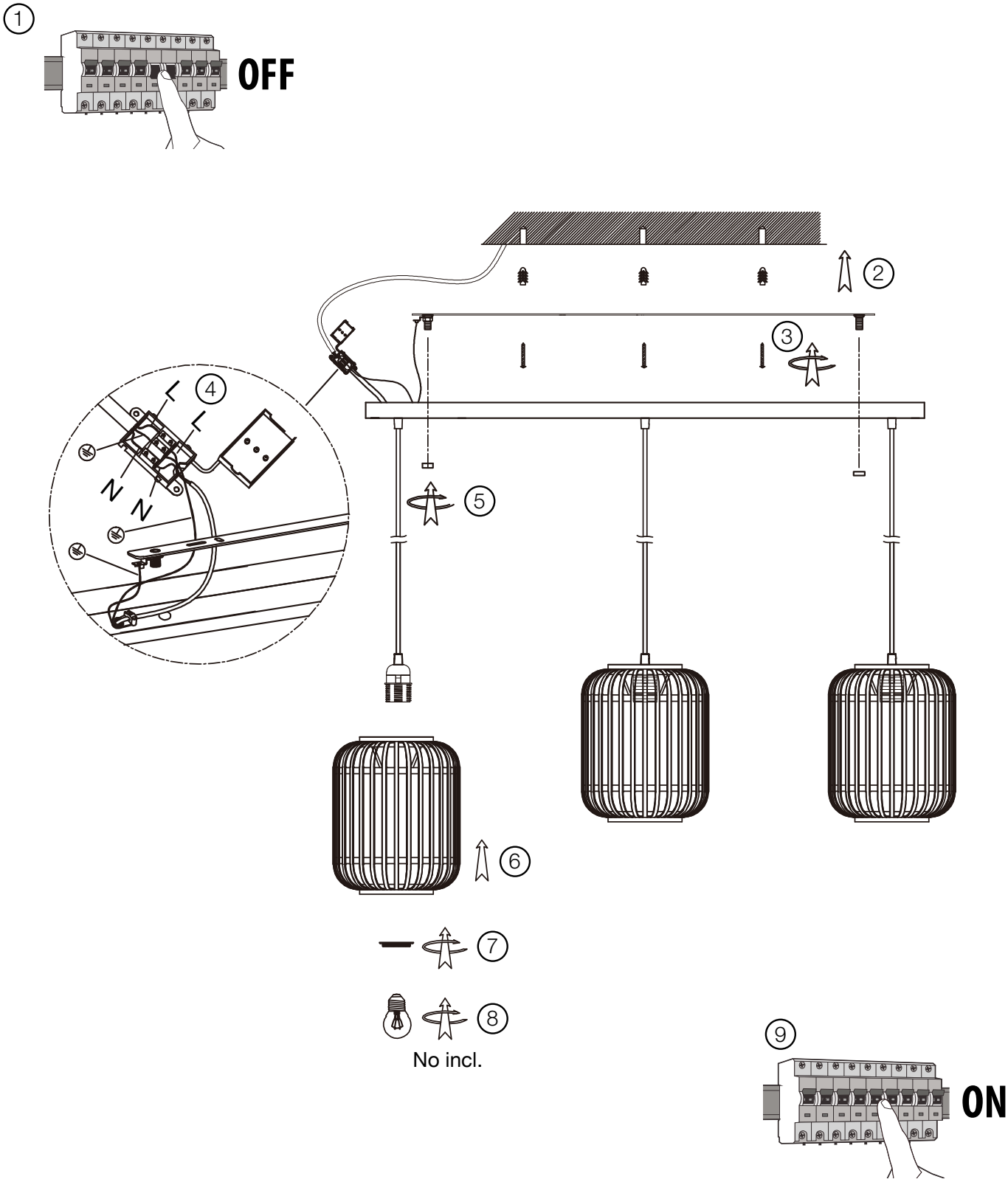
93778...