Brilliant
THE JEWEL IN LIGHTING

Amoa
99116...
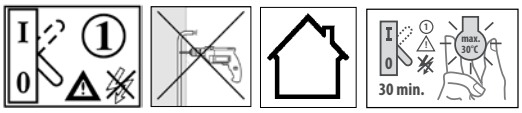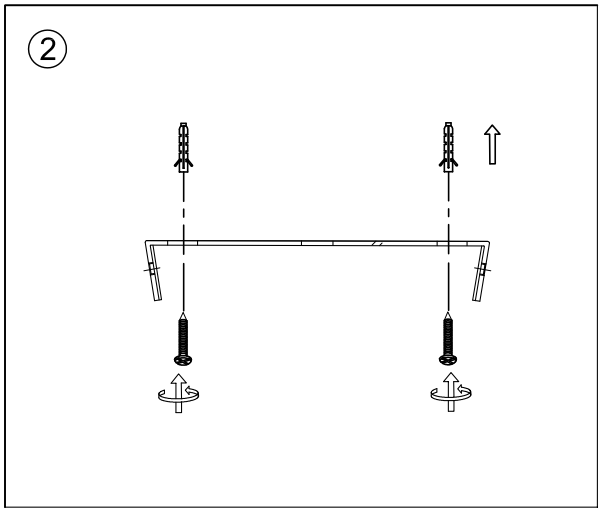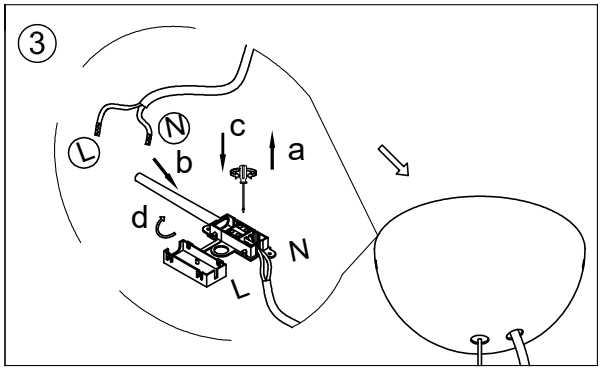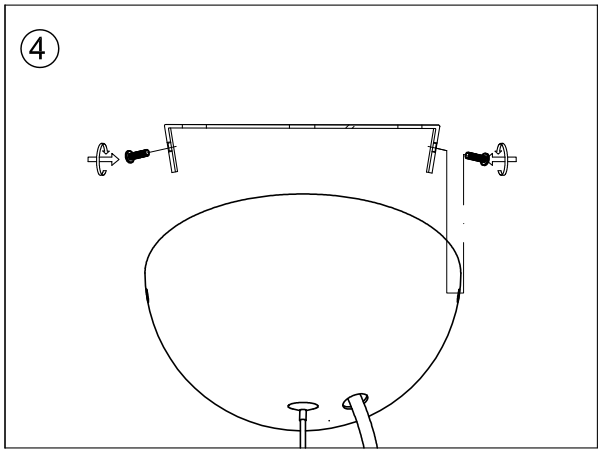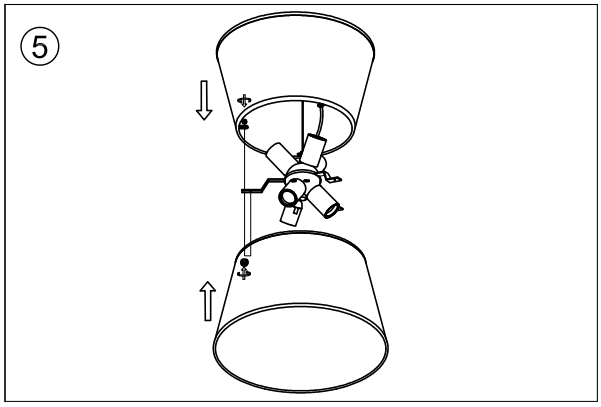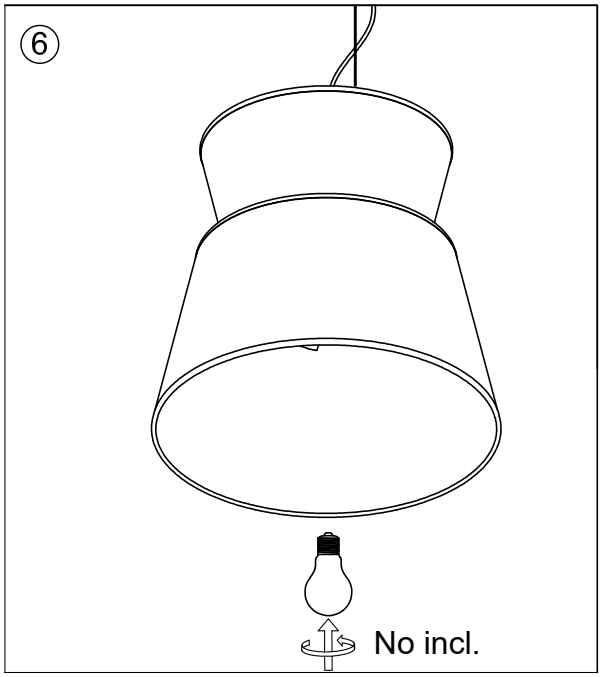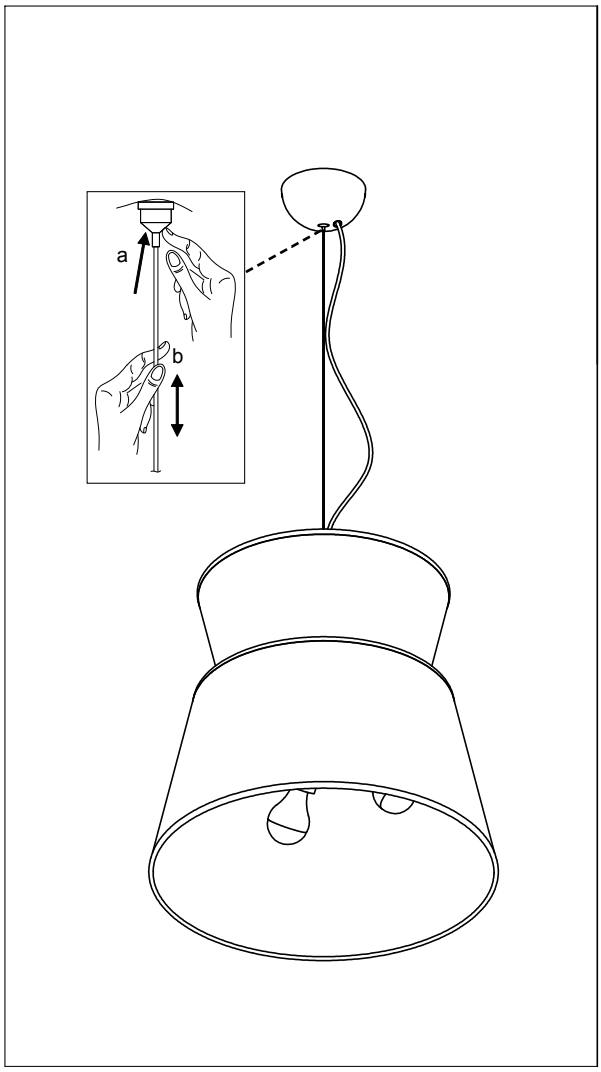
06.19