Brilliant
THE JEWEL IN LIGHTING

Narina
99103...

09.19

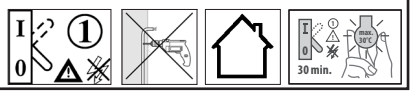

②

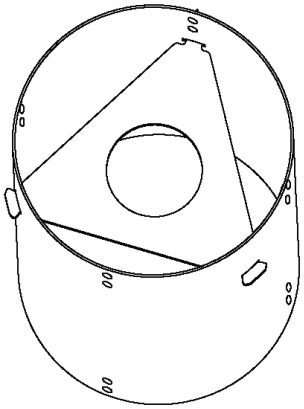

③

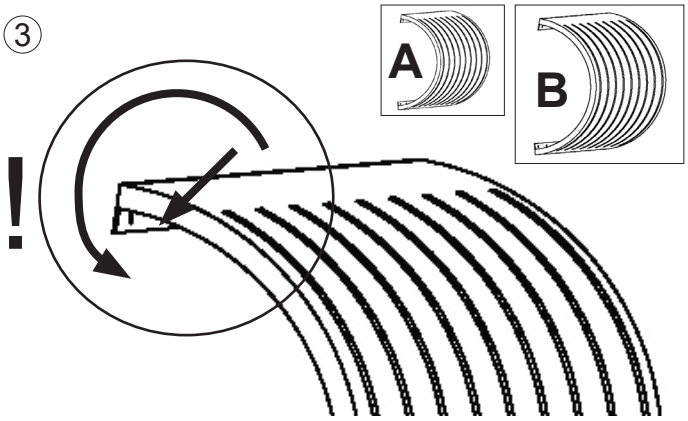

④

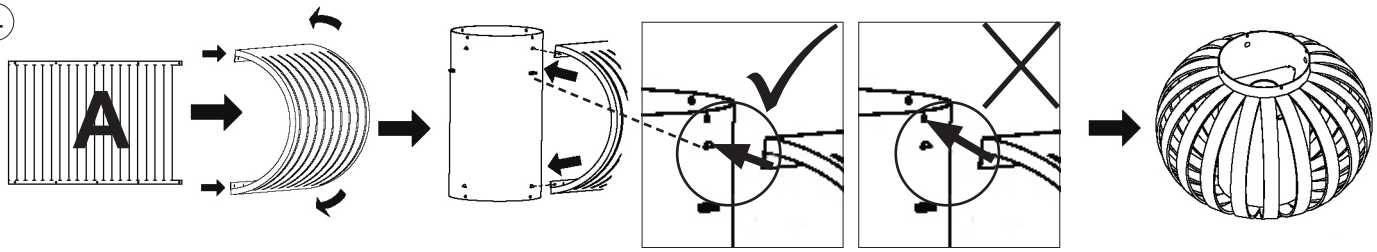

⑤

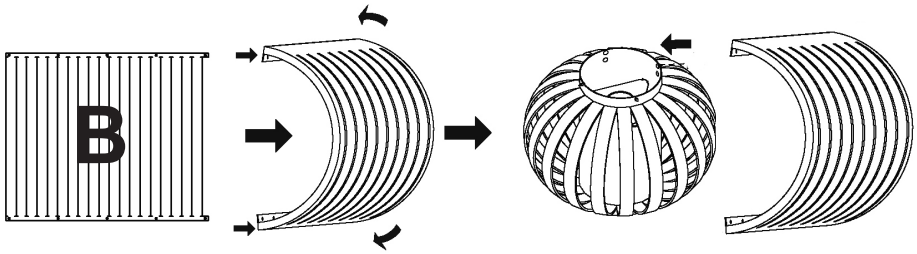

⑥

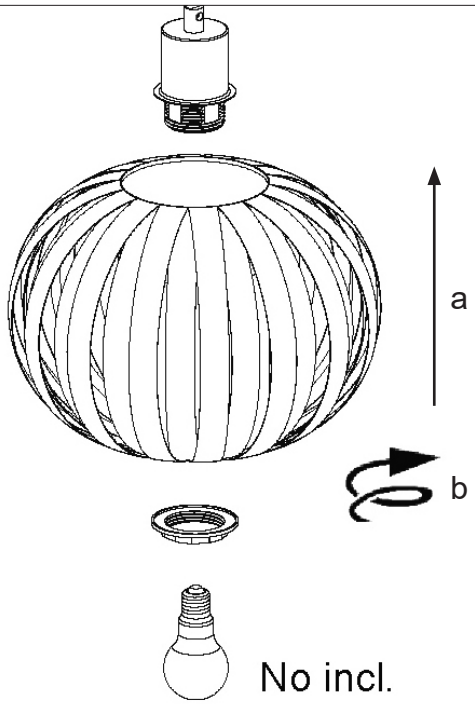
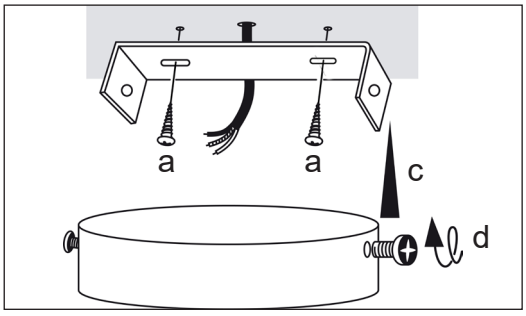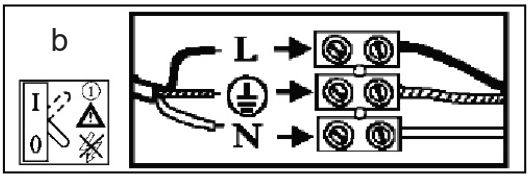
⑦