INSTRUCTION SHEET

Brilliant

NOLA
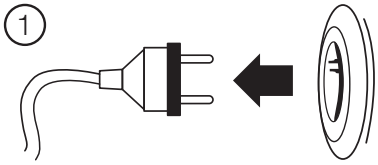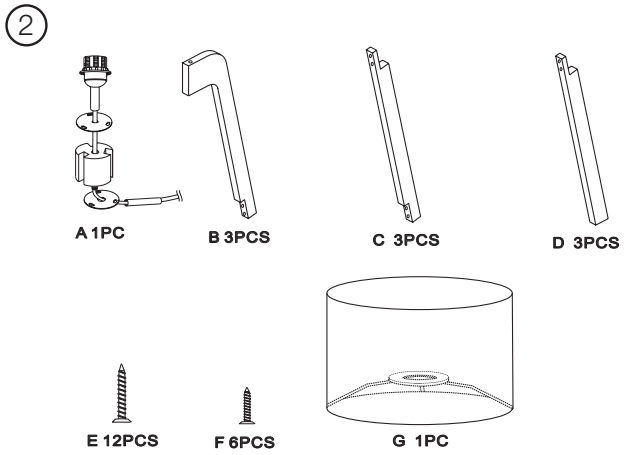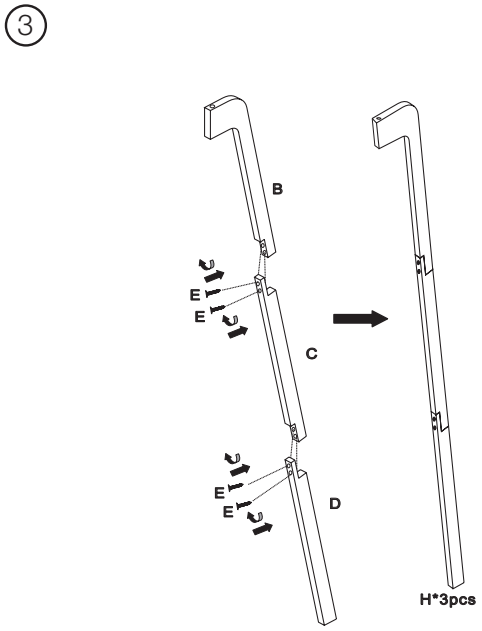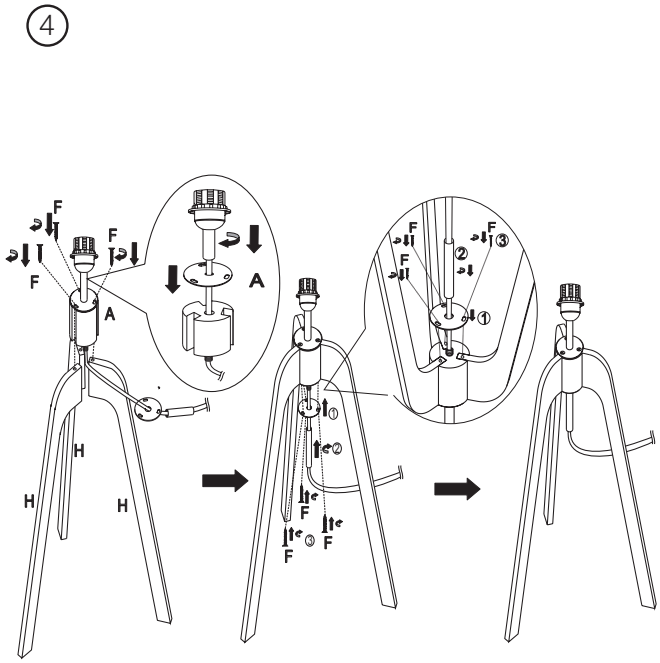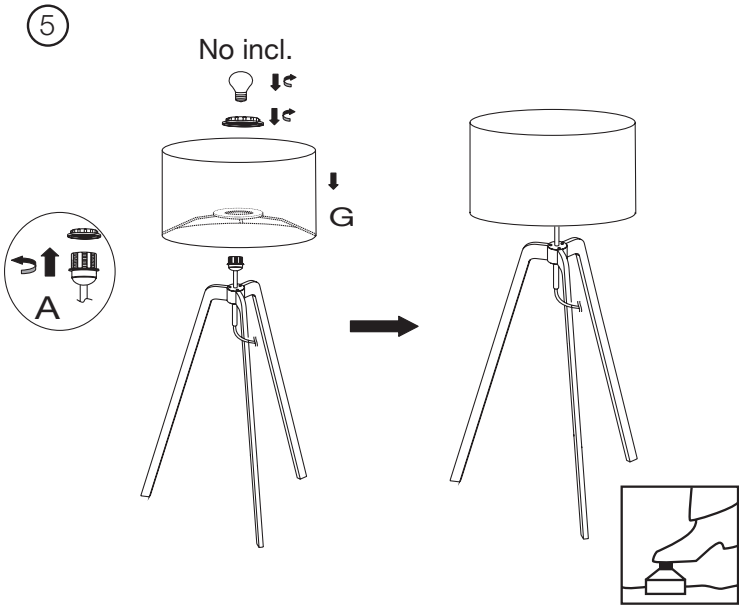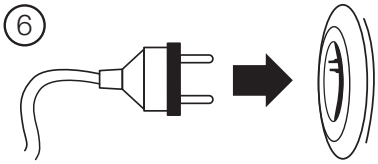
93048...