Brilliant
THE JEWEL IN LIGHTING

Henry
92706...
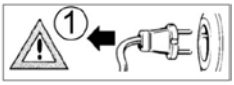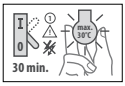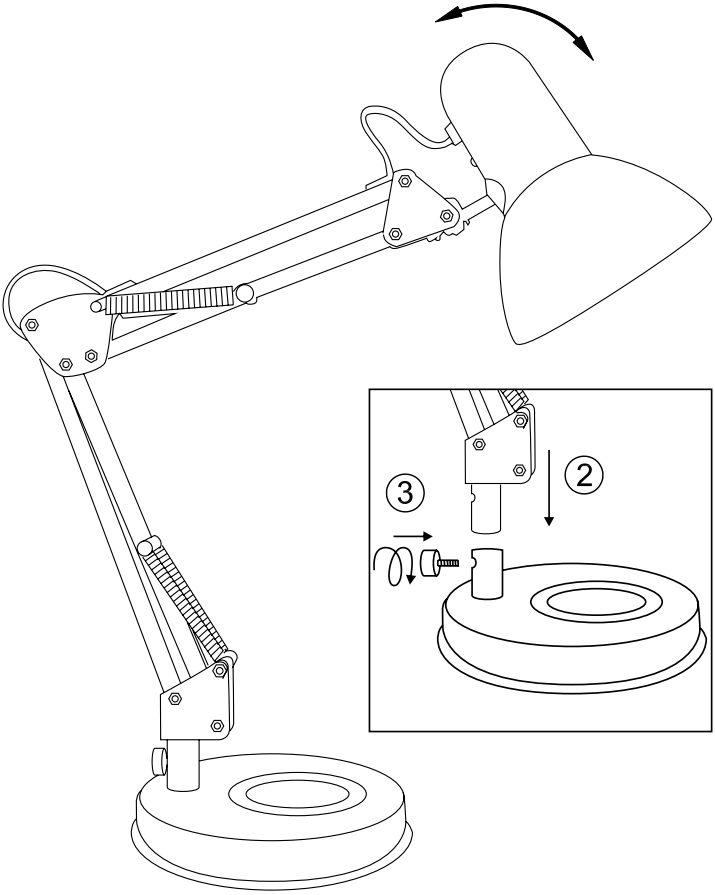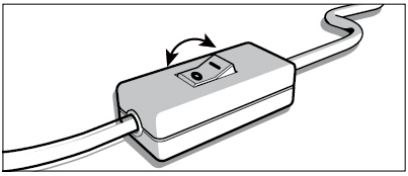
06.18