Brilliant

THE JEWEL IN LIGHTING

Donna TL
92724...

01.10

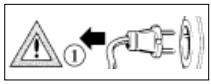

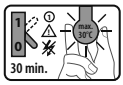

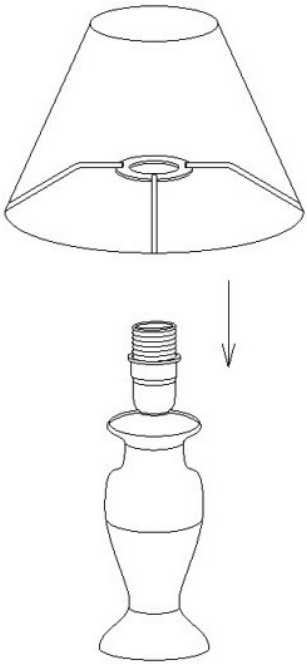

2

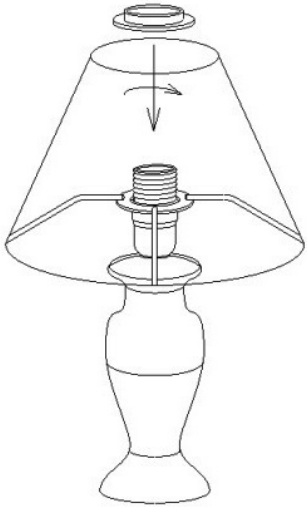
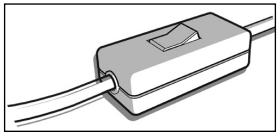
3