Brilliant
THE JEWEL IN LIGHTING

Leo LED Clip Spot
G24801...
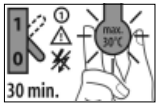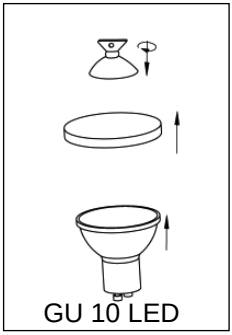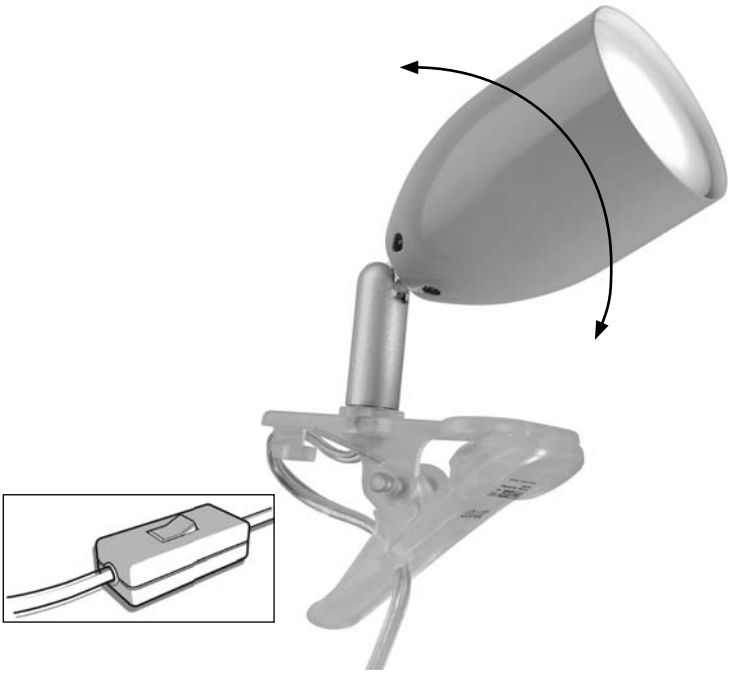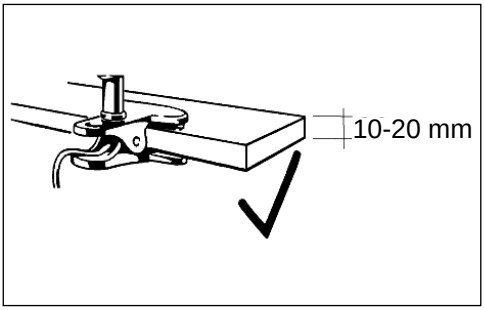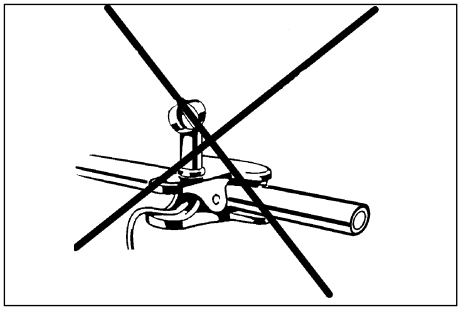
05.12