Brilliant
THE JEWEL IN LIGHTING

Daisy TL LED
G92968...
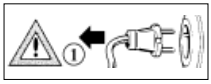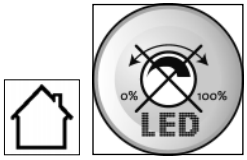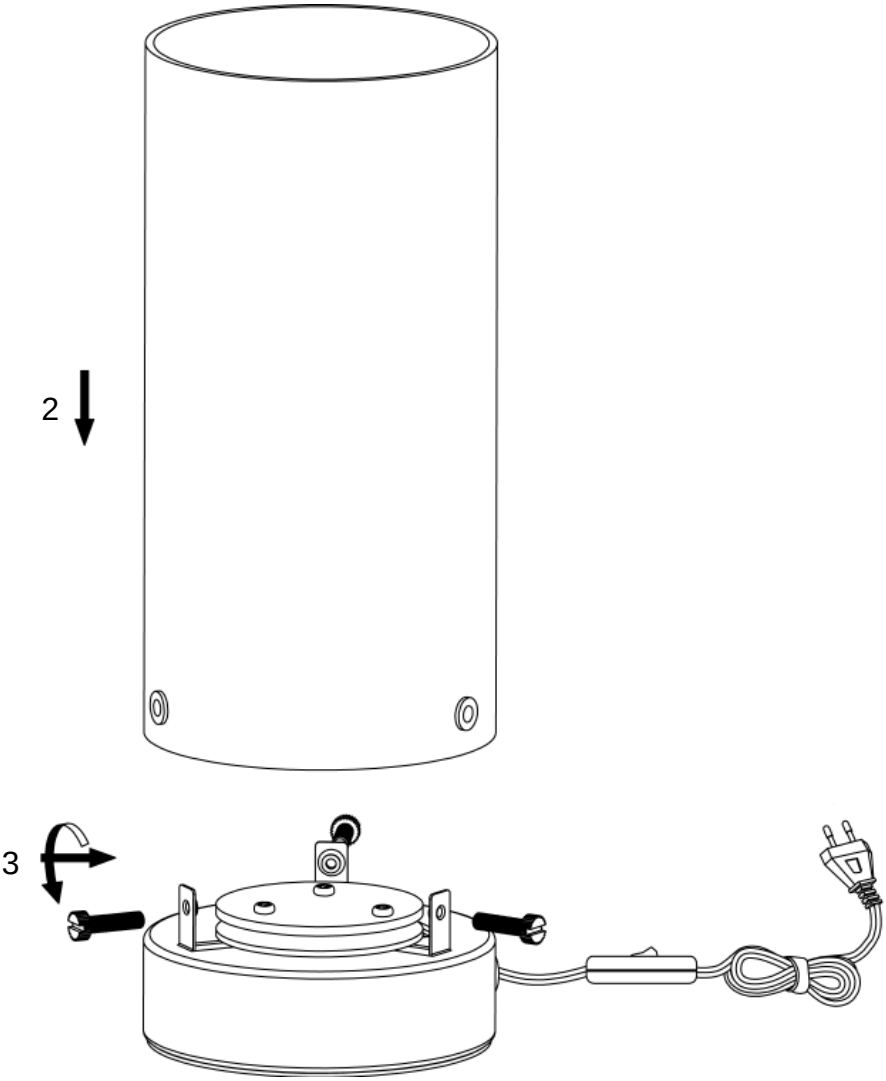
02.14