Brilliant
THE JEWEL IN LIGHTING

Hank
99130...
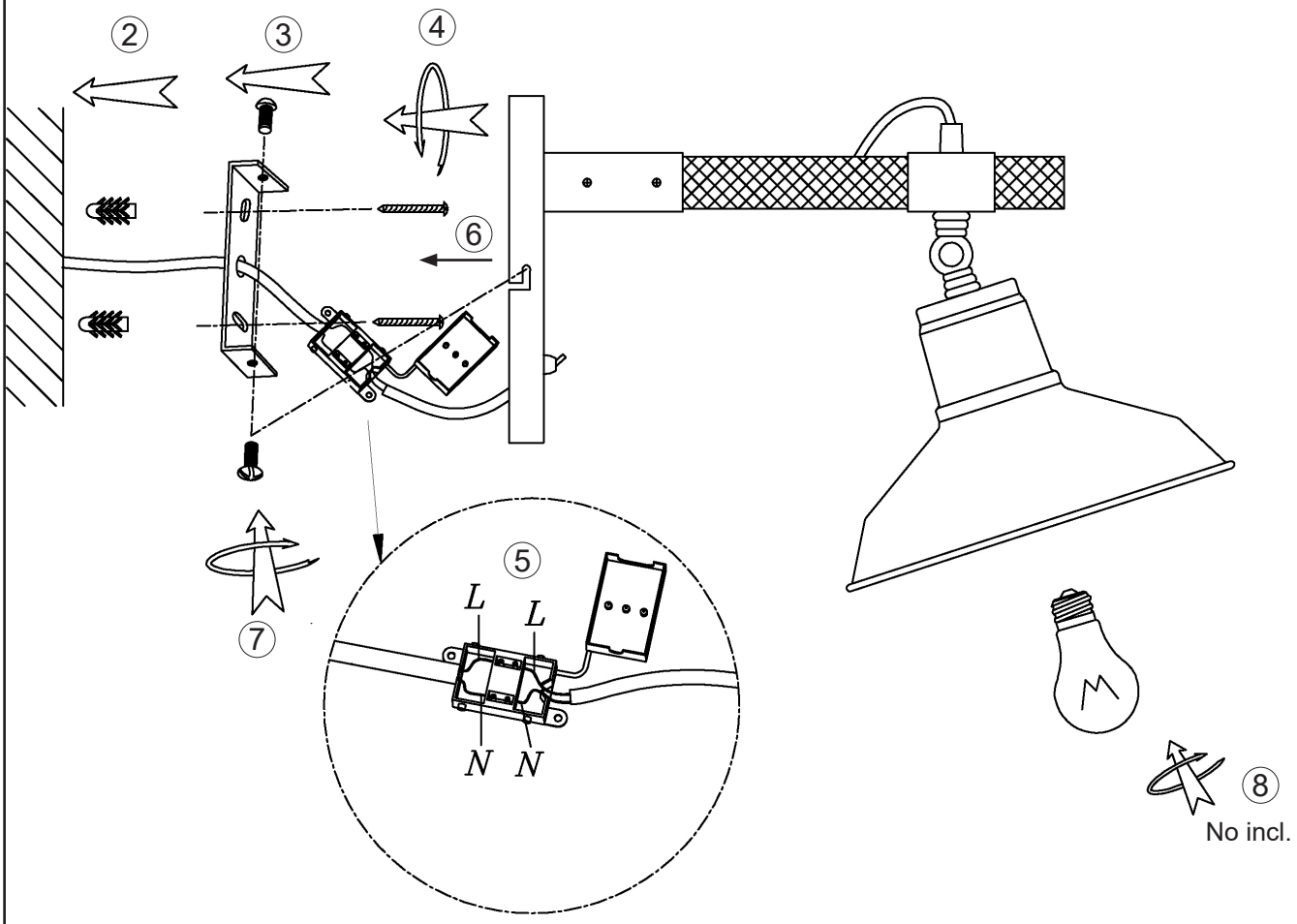
05.19