Brilliant
THE JEWEL IN LIGHTING

Elhi
71933...
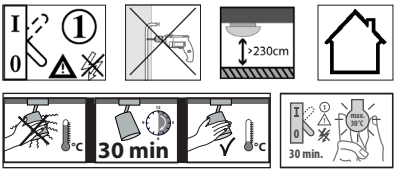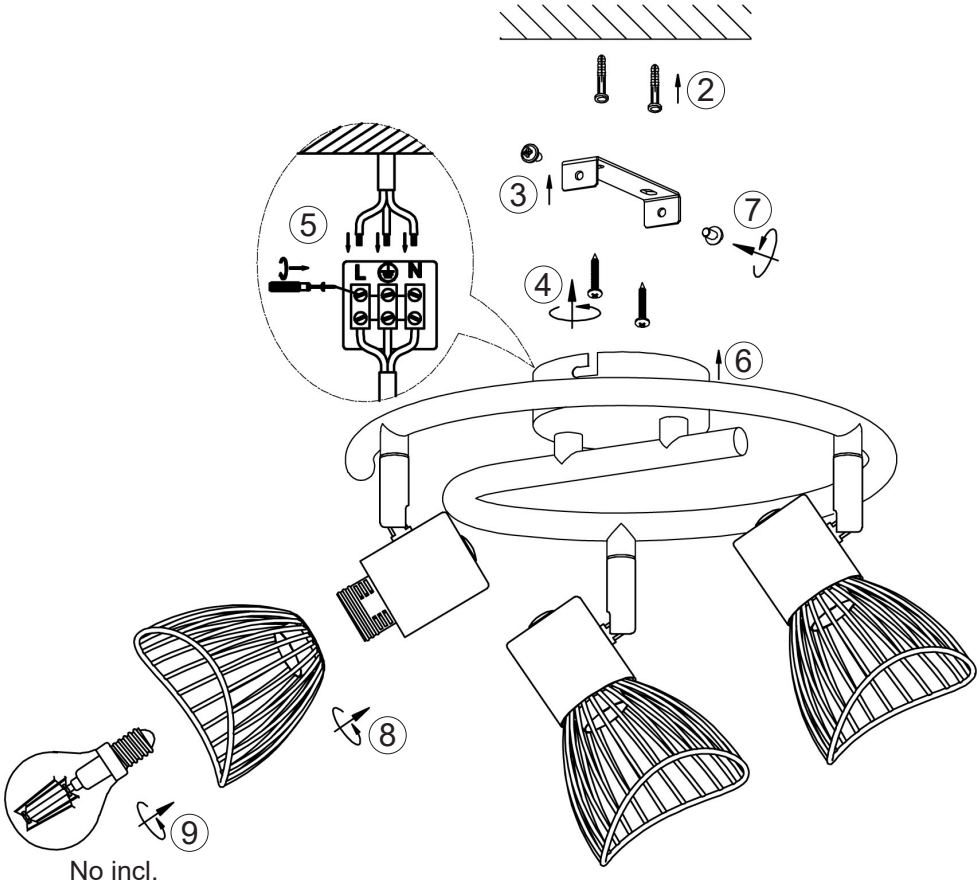
06.18