INSTRUCTION SHEET

Brilliant

SORANA
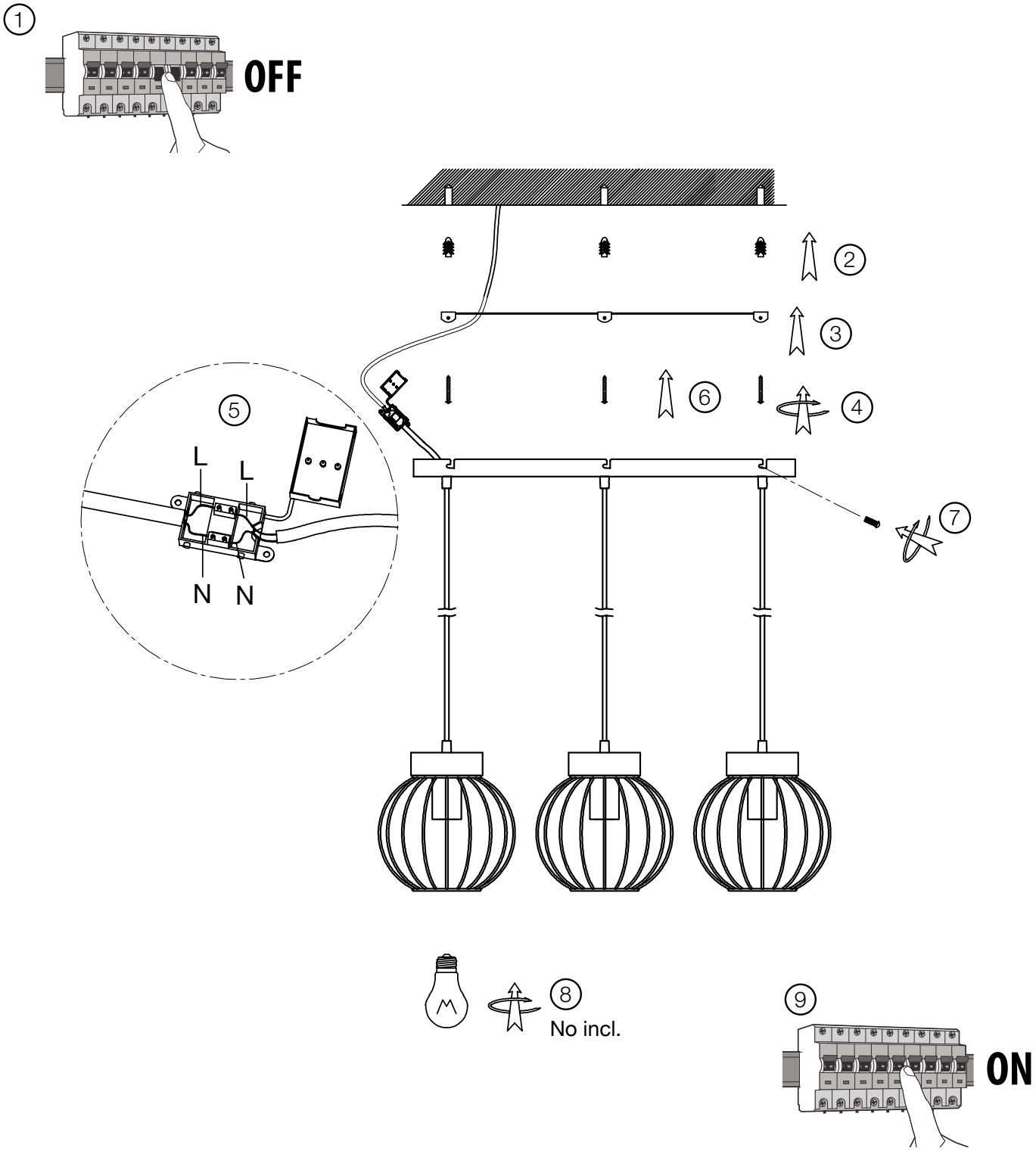
99236...