INSTRUCTION SHEET

Brilliant

SORANA

93044...

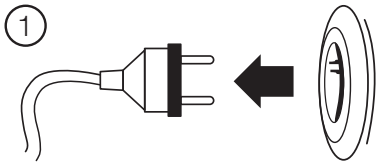

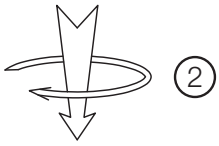
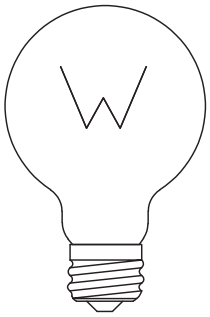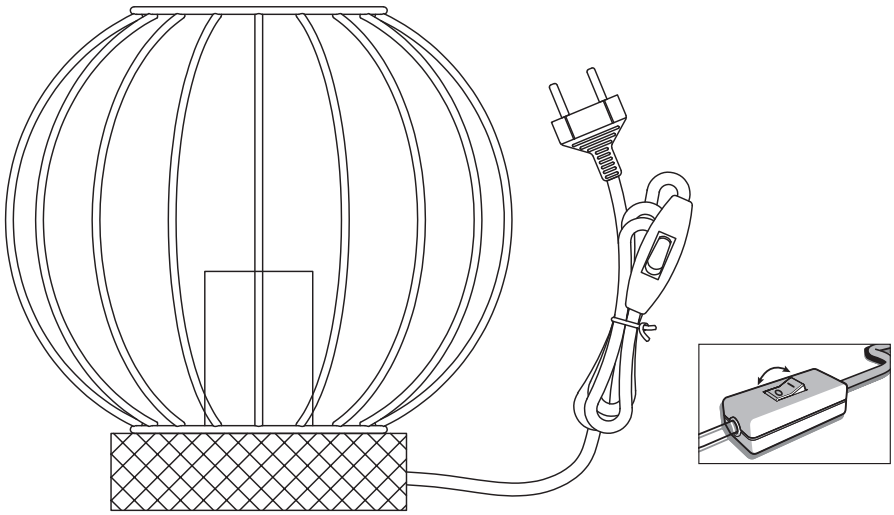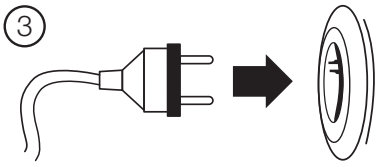
No incl.